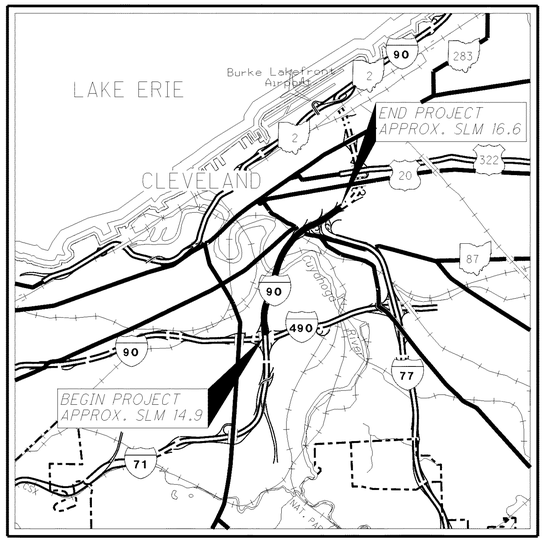

LOCATION MAP

LATITUDE: 41°29'12" LONGITUDE: 81°41'28"

SCALE IN MILES

0 0.5 1 1.5 2

N

PORTION TO BE IMPROVED
INTERSTATE HIGHWAY
STATE & FEDERAL ROUTES
COUNTY & TOWNSHIP ROADS
OTHER ROADS

DESIGN DESIGNATION

SEE DWG. NO. DD-002 INCLUDED IN SURVEY CONTROL

STATE OF OHIO
DEPARTMENT OF TRANSPORTATION

CUY-90-14.90

CITY OF CLEVELAND
CUYAHOGA COUNTY

BRIDGE NUMBERS:

CUY-77-1597L & CUY-90-1651L

STRUCTURE FILE NUMBERS:

1807919 & 1807900

STRUCTURE LOCATION NUMBERS:

10 & 11

NOTE: SEAL AND SIGNATURE ARE AN IMAGE TAKEN FROM THE ORIGINAL AFC DRAWINGS ISSUED ON 03/14/2011.

ENGINEERS SEAL:	ENGINEERS SEAL:
STATE OF OHIO BRIAN T. AVARELLO E-86619 REGISTERED PROFESSIONAL ENGINEER 3/14/11	
SIGNED: DATE:	SIGNED: DATE:

APPROVED _____
DATE _____ DISTRICT DEPUTY DIRECTOR

APPROVED _____
DATE _____ DIRECTOR, DEPARTMENT OF TRANSPORTATION

PROJECT DESCRIPTION

THIS PACKAGE CONSISTS OF THE STRUCTURAL ELEMENTS NEEDED FOR THE DECK REPLACEMENT FOR STRUCTURES I-90 WESTBOUND AND I-77 SOUTHBOUND RAMP OVER E. 14TH STREET.

LIMITED ACCESS

THIS IMPROVEMENT IS ESPECIALLY DESIGNED FOR THROUGH TRAFFIC AND HAS BEEN DECLARED A LIMITED ACCESS HIGHWAY OR FREEWAY BY ACTION OF THE DIRECTOR IN ACCORDANCE WITH THE PROVISIONS OF SECTION 5511.02 OF THE OHIO REVISED CODE.

2010 SPECIFICATIONS

THE STANDARD SPECIFICATIONS OF THE STATE OF OHIO, DEPARTMENT OF TRANSPORTATION, INCLUDING CHANGES AND SUPPLEMENTAL SPECIFICATIONS AS LISTED IN THE WALSH CONTRACT SHALL GOVERN THIS IMPROVEMENT.

NO.	REVISIONS	DATE
	RECORD DRAWINGS	08-09-13

UNDERGROUND UTILITIES

CONTACT BOTH SERVICES
CALL TWO WORKING DAYS
BEFORE YOU DIG

CALL
1-800-362-2764
(TOLL FREE)
OHIO UTILITIES PROTECTION SERVICE
NON-MEMBERS
MUST BE CALLED DIRECTLY

OIL & GAS PRODUCERS PROTECTIVE SERVICE CALL: **1-800-925-0988**

WALSH
WALSH CONSTRUCTION
929 WEST ADAMS STREET
CHICAGO, IL 60607

HNTB
1100 Superior Ave. Ste 1701
Cleveland, OH 44114

DESIGN AGENCY
WALSH HNTB
WALSH CONSTRUCTION

CONSTRUCTION PROJECT NO.
10-3000

CLEVELAND'S INNERBELT BRIDGE
THE DEPARTMENT OF TRANSPORTATION

FEDERAL PROJECT NO.
E090(546)
E100(247)

PID NO.
77332/85531

DWG. NO.
CUY-90-14.90

090_1651LGT001.dgn 12/3/2015 10:27:37 AM rstriegel

SUMMARY OF QUANTITIES			
ITEM	DESCRIPTION	TOTAL QUANTITY	UNIT COST
509E10000	EPOXY COATED REINFORCING STEEL	239,161	POUND
898E10200	QC/QA CONCRETE, CLASS QSC2, SUPERSTRUCTURE (DECK)	784	CU YD
898E11000	QC/QA CONCRETE CLASS QSC2, SUPERSTRUCTURE (PARAPET)	173	CU YD
898E20000	QC/QA CONCRETE, CLASS QSC1, SUBSTRUCTURE	11	CU YD
898E10702	QC/QA CONCRETE, CLASS QSC2, SUPERSTRUCTURE (APPROACH SLAB - 25'-0")	481	SQ YD
513E10200	STRUCTURAL STEEL MEMBERS, LEVEL UF	1,675	POUND
514E00100	SURFACE PREPARATION OF EXISTING STRUCTURAL STEEL	LUMP	LUMP
514E00200	FIELD PAINTING OF EXISTING STRUCTURAL STEEL, PRIME COAT	LUMP	LUMP
514E00060	FIELD PAINTING OF STRUCTURAL STEEL, INTERMEDIATE COAT	LUMP	LUMP
514E00300	FIELD PAINTING OF STRUCTURAL STEEL, FINISH COAT	LUMP	LUMP
519E11100	PATCHING CONCRETE STRUCTURES	225	SQ FT
516E11210	STRUCTURAL EXPANSION JOINT INCLUDING ELASTOMERIC STRIP SEAL	176	FT

INDEX OF SHEETS

REV.	DATE	SHEET	TITLE
3	08/09/13	1	TITLE SHEET
5	08/09/13	2	SHEET INDEX
2	08/09/13	2A	STRUCTURE GENERAL NOTES - 1
3	08/09/13	2B	STRUCTURE GENERAL NOTES - 2
3	08/09/13	2C	STRUCTURE GENERAL NOTES - 3
1	03/04/11	3	SITE PLAN - 1
2	04/04/11	4	SITE PLAN - 2
1	03/04/11	5	GENERAL PLAN
1	03/04/11	6	PHASE CONSTRUCTION DETAILS - 1
2	08/09/13	7	PHASE CONSTRUCTION DETAILS - 2
1	03/14/11	8	PHASE CONSTRUCTION DETAILS - 3
2	01/29/13	9	PHASE CONSTRUCTION DETAILS - 4
2	01/29/13	10	PHASE CONSTRUCTION DETAILS - 5 (REAR ABUTMENT)
1	01/29/13	10A	PHASE CONSTRUCTION DETAILS - 5 (FORWARD ABUTMENT)
1	03/14/11	11	PHASE CONSTRUCTION DETAILS - 6
1	03/14/11	12	REMOVAL DETAILS - 1
1	03/14/11	13	REMOVAL DETAILS - 2
1	03/14/11	14	REMOVAL DETAILS - 3
1	03/14/11	15	REMOVAL DETAILS - 4
1	03/14/11	16	REMOVAL DETAILS - 5
1	03/14/11	17	REMOVAL DETAILS - 6
1	03/14/11	18	REAR ABUTMENT DETAILS
1	03/14/11	19	FORWARD ABUTMENT AND PIER DETAILS
1	01/29/13	19A	RECORD OF PIER 1 PATCHING
1	01/29/13	19B	RECORD OF PIER 3 PATCHING
2	01/29/13	20	FRAMING PLAN
3	08/09/13	21	GIRDER ELEVATION - 1
3	08/09/13	22	GIRDER ELEVATION - 2
1	03/14/11	23	SUPERSTRUCTURE DETAILS
2	01/29/13	24	DRAINAGE DETAILS
1	03/14/11	25	SLAB PLAN
3	08/09/13	26	PARAPET PLAN
3	08/09/13	27	SLAB AND PARAPET DETAILS
4	08/09/13	28	TRANSVERSE SECTION - 1
2	01/29/13	29	TRANSVERSE SECTION - 2
1	03/14/11	30	SCREED ELEVATIONS - 1
1	03/14/11	31	SCREED ELEVATIONS - 2
1	03/14/11	32	SCREED ELEVATIONS - 3
1	03/14/11	33	SCREED ELEVATIONS - 4
1	03/14/11	34	SCREED ELEVATIONS - 5
1	03/14/11	35	STRIP SEAL EXPANSION JOINT DETAILS - 1
1	03/14/11	36	STRIP SEAL EXPANSION JOINT DETAILS - 2
3	08/09/13	37	APPROACH SLAB DETAILS - 1
3	08/09/13	38	APPROACH SLAB DETAILS - 2

REVISIONS

04/04/11 - REVISED PROFILE GRADE FOR RAMP E10.

REVISED REBAR IN BRIDGE PARAPET.

REVISED CONCRETE SEALING COLOR.

REVISED DECK CONCRETE SEALING LIMITS.

04/26/11 - REVISED FASCIA PARAPET CROSS SECTION.

01/29/13 - RECORD DRAWINGS - SHOW PATCHING
RECORD DRAWINGS - RFI 00010,RFI 00028, RFI 00040, RFI 00065, RFI 00128, RFI 00306, NDC 007

08/09/13 - RECORD DRAWINGS - RFI 00013, RFI 00016, NCR 004, CHANGE ORDER #15
RECORD DRAWINGS - ADDED RECORD CHANGE TABLE

DRAWING ISSUE	IMPACT TO DESIGN	ENGINEER OF RECORD	DATE OF CHANGE OR IMAGE OF SEAL/DATE FROM ORIGINAL DOCUMENT	SHEET NO.
APPROVED FOR CONSTRUCTION	NA	Brian T. Avarello #66619	Image of Seal from RFC Plans on Title Sheet	1/38
NDC 0003 - BL 10 Vertical Curve	Yes	Kenneth Fertal # 67122		4, 26, 28, 37, 38/38
NDC 0004 - BL 10-11 parapets	No	NA	NA	4, 26, 28, 37, 38/38
NDC 0005 - BL 9 10 11 12 Concrete Seal Limits	No	NA	NA	4, 26, 28, 37, 38/38
NDC 0006 - BL 9 10 11 12 Deck Slab Chamfer	Yes	Brian T. Avarello #66619	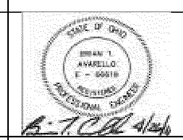	27/38
As-built NDC 0007 - BL 9 10 11 12 Crossframe Repair Details	No	NA	NA	20/38
As-built RFI 00010 - BL 10 and 11 Shear Connector	No	NA	NA	21, 22/38
As-built RFI 00013 - All Bridges Parapet Bars	No	NA	NA	26, 27, 28, 37, 38/38
As-built RFI 00016 - BL 10 heat straightening per NCR 004	No	NA	NA	7/38
As-built RFI 00028 - BL 10 11 Bottom Mat Deck Rebar	No	NA	NA	28, 29/38
As-built RFI 00040 - BL 7 8 9 10 11 12 Welding SIP Formwork	Yes	Brian T. Avarello #66619		2B/38
As-built RFI 00065 - BL 9 10 11 12 Anchored PCB	No	NA	NA	9, 10, 10A/38
As-built RFI 00128 - Pier Downspout Bracket	No	NA	NA	24/38
As-built RFI 00306 - Epoxy-Urethane Conc Sealant BL-7-12	No	NA	NA	2B/38
Changed sheet numbers	No	NA	NA	2A, 2B, 2C/38
Change Order #15	No	NA	NA	21, 22/38

NO.	REVISIONS	DATE
	RECORD DRAWINGS	08-09-13

DESIGN AGENCY: WALSH HNTB (WALSH CONSTRUCTION)

CLEVELAND'S INNERBELT BRIDGE 90 — OHIO DEPARTMENT OF TRANSPORTATION

BRIDGES 10 & 11

SHEET INDEX

BRIDGE NO. CUY-77-1597 L AND CUY-90-1651 L
I-90WB AND I-77SB RAMP OVER E 14TH STREET

DESIGNED	DRAWN	REVIEWED	DATE
RSB	RSB	RSB	03-11-11
CHECKED	CHECKED	STRUCTURE FILE NUMBER	
JTW	JTW	1807919/1807900	

CUY-90-14.90

PID No. 77332/85531

2/38

2/38

090_1651LGT002.dgn 12/3/2015 10:27:42 AM rstriegel

STRUCTURE GENERAL NOTES

STANDARD DRAWINGS AND SUPPLEMENTAL SPECIFICATIONS

REFER TO THE FOLLOWING STANDARD BRIDGE DRAWING(S):

A-1-69	REVISED	07-19-02	GSD-1-96	REVISED	07-19-02
AS-1-81	REVISED	07-19-02	PCB-91	REVISED	07-19-02
BR-2-98	REVISED	07-19-02	RB-1-55	REVISED	02-02-59
EXJ-4-87	REVISED	07-19-02	SBR-1-99	REVISED	07-19-02

AND TO THE FOLLOWING SUPPLEMENTAL SPECIFICATIONS:

898 DATED 07-17-09

AND TO THE FOLLOWING CONTRACT DOCUMENT:

STRUCTURE PROJECT PROVISIONS ST-01 DATED 07-23-10

DESIGN SPECIFICATIONS

DESIGN SPECIFICATIONS: THESE STRUCTURES CONFORM TO "STANDARD SPECIFICATIONS FOR HIGHWAY BRIDGES" ADOPTED BY THE AMERICAN ASSOCIATION OF STATE HIGHWAY AND TRANSPORTATION OFFICIALS, 17th EDITION - 2002, AASHTO/AWS BRIDGE WELDING CODE, SIXTH EDITION AND THE 2004 ODOT BRIDGE DESIGN MANUAL.

SPECIAL DESIGN SPECIFICATION

BRIDGE CUY-90-1651R REQUIRED THE USE OF A THREE DIMENSIONAL MODEL USING THE GRILLAGE DESIGN METHOD TO ANALYZE THE STRUCTURE. THE COMPUTER PROGRAM USED FOR STRUCTURAL ANALYSIS WAS BDGS. THE BRIDGE COMPONENT DESIGNED BY THIS METHOD WAS BEAM AA. DEAD LOAD DISTRIBUTION: CONCRETE PARAPET DEAD LOAD WAS DISTRIBUTED TO ALL GIRDERS.

DESIGN LOADING

DESIGN LOADING: HS20, CASE I AND THE ALTERNATE MILITARY LOADING

FUTURE WEARING SURFACE (FWS) OF 60 POUNDS PER SQUARE FOOT

DESIGN DATA

CONCRETE CLASS QSC2 - COMPRESSIVE STRENGTH 4500 PSI (SUPERSTRUCTURE)

CONCRETE CLASS QSC1 - COMPRESSIVE STRENGTH 4000 PSI (SUBSTRUCTURE)

REINFORCING STEEL - ASTM A615 OR A996, GRADE 60, MINIMUM YIELD STRENGTH 60,000 PSI, EPOXY COATED

STRUCTURAL STEEL - ASTM A709 GRADE 50, YIELD STRENGTH 50,000 PSI

DECK PROTECTION METHOD

EPOXY COATED REINFORCING STEEL

2½" CONCRETE COVER

MONOLITHIC WEARING SURFACE

MONOLITHIC WEARING SURFACE IS ASSUMED, FOR DESIGN PURPOSES, TO BE 1 INCH THICK.

PROPOSED WORK:

THE WORK TO BE PERFORMED UNDER THIS CONTRACT IS AS SHOWN IN THE CONSTRUCTION PLANS AND, IN GENERAL, INCLUDES THE FOLLOWING FOR SPECIFIC STRUCTURES REQUIRING REHABILITATION:

CUY-90-1628 L/R

1. PHASE REMOVE EXISTING DECK SUPERSTRUCTURE, TIMBER SUB-DECKING, APPROACH SLABS AND PORTIONS OF EXISTING ABUTMENTS.
2. PATCH AND MODIFY EXISTING SUBSTRUCTURES.
3. REMOVE AND REPLACE EXISTING BEARINGS.
4. RETROFIT EXISTING COVER PLATES.
5. INSTALL SHEAR CONNECTORS.
6. CONSTRUCT COMPOSITE DECK SUPERSTRUCTURE AND APPROACH SLABS.
7. INSTALL ELASTOMERIC STRIP SEALS.

CUY-90-1640

1. PHASE REMOVE EXISTING DECK SUPERSTRUCTURE, APPROACH SLABS AND PORTIONS OF EXISTING ABUTMENTS.
2. PATCH AND MODIFY EXISTING SUBSTRUCTURES.
3. REMOVE AND REPLACE EXISTING BEARINGS.
4. INSTALL SHEAR CONNECTORS.
5. CONSTRUCT COMPOSITE DECK SUPERSTRUCTURE AND APPROACH SLABS.
6. INSTALL ELASTOMERIC STRIP SEALS.

CUY-77-1597L, CUY-90-1651 L/R

1. PHASE REMOVE EXISTING DECK SUPERSTRUCTURE, TIMBER SUB-DECKING, APPROACH SLABS AND PORTIONS OF EXISTING ABUTMENTS.
2. PATCH, MODIFY AND WIDEN EXISTING SUBSTRUCTURES.
3. ERECT PROPOSED FASCIA BEAM (CUY-90-1651R)
4. INSTALL SHEAR CONNECTORS.
5. CONSTRUCT COMPOSITE DECK SUPERSTRUCTURES AND APPROACH SLABS.
6. INSTALL ELASTOMERIC STRIP SEALS.

ITEM 202, PORTIONS OF STRUCTURE REMOVED OVER 20' SPAN, AS PER PLAN

THIS ITEM SHALL INCLUDE THE ELEMENTS INDICATED IN THE PLANS AND GENERAL NOTES AND THAT ARE NOT SEPARATELY LISTED FOR PAYMENT, EXCEPT FOR WEARING COURSE REMOVAL. ITEMS TO BE REMOVED INCLUDE ALL EXISTING MATERIALS BEING REPLACED BY NEW CONSTRUCTION AND MISCELLANEOUS ITEMS THAT ARE NOT SHOWN TO BE INCORPORATED INTO THE FINAL CONSTRUCTION AND ARE DIRECTED TO BE REMOVED BY THE ENGINEER. THE USE OF EXPLOSIVES AND/OR HEADACHE BALLS WILL NOT BE PERMITTED. THE METHOD OF REMOVAL AND THE WEIGHT OF HAMMER SHALL BE APPROVED BY THE ENGINEER. PERFORM ALL WORK IN A MANNER THAT WILL NOT CUT, ELONGATE OR DAMAGE THE EXISTING REINFORCING STEEL TO BE PRESERVED. CHIPPING HAMMERS SHALL NOT BE HEAVIER THAN THE NOMINAL 90-POUND CLASS. PNEUMATIC HAMMERS SHALL NOT BE PLACED IN DIRECT CONTACT WITH REINFORCING STEEL THAT IS TO BE RETAINED IN THE REBUILT STRUCTURE. SUBMIT CONSTRUCTION PLANS ACCORDING TO CMS 501.05.

CONCRETE DECK REMOVALS:

THIS WORK CONSISTS OF THE REMOVAL OF CONCRETE DECKS INCLUDING SIDEWALKS, PARAPETS, RAILINGS, DECK JOINTS AND OTHER APPURTENANCES FROM STEEL SUPPORTING SYSTEMS (BEAMS, GIRDERS, CROSS FRAMES, ETC.). THE PROVISIONS OF ITEM 202 APPLY EXCEPT AS SPECIFIED BY THE FOLLOWING NOTES. PERFORM WORK CAREFULLY DURING DECK REMOVALS TO PROTECT PORTIONS OF SUCH SYSTEMS THAT ARE TO BE SALVAGED AND INCORPORATED INTO THE PROPOSED STRUCTURE. THE USE OF EXPLOSIVES AND/OR HEADACHE BALLS IS PROHIBITED. SUBMIT CONSTRUCTION PLANS ACCORDING TO CMS 501.05.

PROTECTION OF STEEL SUPPORT SYSTEMS:

BEFORE DECK SLAB CUTTING IS PERMITTED, DRAW THE OUTLINE OF PRIMARY STEEL MEMBERS IN CONTACT WITH THE BOTTOM OF THE DECK ON THE SURFACE OF DECK. DRILL SMALL DIAMETER PILOT HOLES 2 INCHES OUTSIDE THESE LINES TO CONFIRM THE LOCATION OF FLANGE EDGES. DECK CUTS OVER OR WITHIN 2 INCHES OF FLANGE EDGES SHALL NOT EXTEND LOWER THAN THE BOTTOM LAYER OF DECK SLAB REINFORCING STEEL. CUTS MADE OUTSIDE 2 INCHES OF FLANGE EDGES MAY EXTEND THE FULL DEPTH OF THE DECK. PERFORM WORK CAREFULLY DURING CUTTING OF THE DECK SLAB TO AVOID DAMAGING STEEL MEMBERS THAT ARE TO BE INCORPORATED INTO THE PROPOSED STRUCTURE. REPLACE OR REPAIR STEEL MEMBERS DAMAGED BY THE DECK SLAB CUTTING OPERATIONS AT NO COST TO THE PROJECT. AT LEAST 7 DAYS BEFORE PERFORMING REPAIR WORK, SUBMIT A PROPOSED REPAIR PLAN, DEVELOPED BY AN OHIO REGISTERED PROFESSIONAL ENGINEER TO THE DIRECTOR. OBTAIN THE DIRECTOR'S APPROVAL BEFORE PERFROMING REPAIR.

REMOVAL METHODS:

THE CONTRACTOR MAY REMOVE CONCRETE BY CUTTING AND BY MEANS OF PNEUMATIC OR HYDRAULIC HAMMERS EMPLOYING POINTED OR BLUNTED CHISEL TYPE TOOLS. FOR REMOVALS OVER STRUCTURAL MEMBERS (I-BEAM, STEEL BEAM STEEL GIRDER, ETC), THE CONTRACTOR MAY USE A HAMMER HEAVIER THAN 35 POUNDS BUT NOT TO EXCEED 90 POUNDS UNLESS APPROVED BY THE ENGINEER. REMOVAL METHODS OVER STRUCTURAL MEMBERS SHALL ENSURE ADEQUATE DEPTH CONTROL AND PREVENT NICKING OR GOUGING THE PRIMARY STRUCTURAL MEMBERS.

DUE TO THE POSSIBLE PRESENCE OF ATTACHMENTS (E.G., FINISHING MACHINE, SCUPPER AND FORM SUPPORTS, ETC.) TO EXISTING STRUCTURAL MEMBERS, PERFORM WORK CAREFULLY DURING DECK REMOVAL TO AVOID DAMAGING STRUCTURAL MEMBERS THAT ARE TO REMAIN. REPLACE OR REPAIR STRUCTURAL MEMBERS DAMAGED BY THE REMOVAL OPERATIONS AT NO COST TO THE PROJECT. AT LEAST 7 DAYS BEFORE PERFORMING REPAIR WORK, SUBMIT A PROPOSED REPAIR PLAN, DEVELOPED BY AN OHIO REGISTERED PROFESSIONAL ENGINEER TO THE DIRECTOR. OBTAIN THE DIRECTOR'S APPROVAL BEFORE PERFORMING REPAIR.

EXISTING WELDED ATTACHMENTS:

REMOVE EXISTING WELDED ATTACHMENTS (E.G., FINISHING MACHINE AND FORM SUPPORTS; AND SUPPORTS FOR SCUPPERS AND BULB ANGLES WHICH ARE TO BE REMOVED) LOCATED IN THE DESIGNATED TENSION PORTIONS OF THE TOP FLANGES OF EXISTING STEEL MEMBERS AND GRIND THE FLANGE SURFACES SMOOTH. CAREFULLY GRIND PARALLEL TO THE FLANGES.

CUT LINE CONSTRUCTION JOINT PREPARATION:

SAW CUT BOUNDARIES OF PROPOSED CONCRETE REMOVALS 1 INCH DEEP. REMOVE CONCRETE TO A ROUGH SURFACE. LEAVE THE EXISTING REINFORCING STEEL, IF REQUIRED IN THE PLANS, IN PLACE. INSTALL DOWEL BARS IF SPECIFIED. PRIOR TO CONCRETE PLACEMENT ABRASIVELY CLEAN JOINT SURFACES AND EXISTING EXPOSED REINFORCEMENT TO REMOVE LOOSE AND DISINTEGRATED CONCRETE AND LOOSE RUST. THOROUGHLY CLEAN THE JOINT SURFACE AND EXPOSED REINFORCEMENT OF ALL DIRT, DUST, RUST OR OTHER FOREIGN MATERIAL BY THE USE OF WATER, AIR UNDER PRESSURE, OR OTHER METHODS THAT PRODUCE SATISFACTORY RESULTS. EXISTING REINFORCING STEEL DOES NOT HAVE TO HAVE A BRIGHT STEEL FINISH, BUT REMOVE ALL PACK AND LOOSE RUST. THOROUGHLY DRENCH EXISTING CONCRETE SURFACES WITH CLEAN WATER AND ALLOW TO DRY TO A DAMP CONDITION BEFORE PLACING CONCRETE.

SUBSTRUCTURE CONCRETE REMOVAL:

REMOVE CONCRETE BY MEANS OF APPROVED PNEUMATIC HAMMERS EMPLOYING POINTED AND BLUNT CHISEL TOOLS. THE WEIGHT OF THE HAMMER SHALL NOT BE MORE THAN 35 POUNDS FOR REMOVAL WITHIN 18 INCHES OF PORTIONS TO BE PRESERVED. OUTSIDE THE 18 INCH LIMIT, THE CONTRACTOR MAY USE HAMMERS NOT EXCEEDING 90 POUNDS UPON THE APPROVAL OF THE ENGINEER. DO NOT PLACE PNEUMATIC HAMMERS IN DIRECT CONTACT WITH REINFORCING STEEL THAT IS TO BE RETAINED IN THE REBUILT STRUCTURE.

MAINTENANCE OF TRAFFIC

I.R. 90 TRAFFIC WILL BE MAINTAINED AT ALL TIMES. FOR MAINTENANCE OF TRAFFIC NOTES, PERMITTED LANE CLOSURES AND DETAILS, REFER TO ROADWAY PLANS AND STRUCTURE PHASE CONSTRUCTION DETAILS.

UTILITY LINES:

THE CONTRACTOR AND UTILITIES ARE TO COOPERATE BY ARRANGING THEIR WORK IN SUCH A MANNER THAT INCONVENIENCE TO EITHER WILL BE HELD TO A MINIMUM.

ITEM 203 - EMBANKMENT, AS PER PLAN:

PLACE AND COMPACT EMBANKMENT MATERIAL IN 6 INCH LIFTS FOR THE CONSTRUCTION OF THE APPROACH EMBANKMENT.

NO.	REVISIONS	DATE
	RECORD DRAWINGS	08/09/13

DESIGN AGENCY: WALSH HNTB (WALSH CONSTRUCTION)

CLEVELAND'S INNERBELT BRIDGE — 90 — OHIO DEPARTMENT OF TRANSPORTATION

BRIDGES 7 8
BRIDGE 9
BRIDGES 10 11 12

STRUCTURE GENERAL NOTES - 1

CUY-90-1628 L/R; CUY-90-1640; CUY-90-1651 L/R; CUY-77-1597 L
I-90 EASTBOUND AND WESTBOUND OVER E 9TH STREET

DESIGNED	DRAWN	REVIEWED	DATE
BTA	BTA	JOL	01-18-11
CHECKED	CHECKED	STRUCTURE FILE NUMBER	
NJ	NJ	1807498 / 1807714	

CUY-90-14.90
PID No. 77332/85531

2A / 38

090_1651LGN001.dgn 1/8/2016 11:30:06 AM rstriegel

STRUCTURE GENERAL NOTES

PILE DESIGN LOADS (ULTIMATE BEARING VALUE):

CUY-90-1651R

THE ULTIMATE BEARING VALUE IS 75 TONS PER PILE FOR THE 12" C.I.P. REINFORCED CONCRETE REAR AND FORWARD ABUTMENT PILES. THE ULTIMATE BEARING VALUE IS 109 TONS PER PILE FOR THE 14" C.I.P. REINFORCED CONCRETE PIER PILES.

ABUTMENT AND PIER PILES:
5 PILES 45 FEET LONG, ORDER LENGTH (REAR)
4 PILES 75 FEET LONG, ORDER LENGTH (PIER 1)
4 PILES 90 FEET LONG, ORDER LENGTH (PIER 2)
4 PILES 90 FEET LONG, ORDER LENGTH (PIER 3)
5 PILES 55 FEET LONG, ORDER LENGTH (FORWARD)
2 DYNAMIC LOAD TESTING ITEMS

BATTERED PILES:

THE BLOW COUNT FOR BATTERED PILES SHALL BE THE BLOW COUNT DETERMINED FOR VERTICAL PILES OF THE SAME ULTIMATE BEARING VALUE DIVIDED AN EFFICIENCY FACTOR (D). COMPUTE THE EFFICIENCY FACTOR (D) AS FOLLOWS:

$$D = \frac{1-UG}{\sqrt{1+G^2}}$$

U = COEFFICIENT OF FRICTION, WHICH IS ESTIMATED AT 0.05 FOR DOUBLE-ACTING AIR OPERATED OR DIESEL HAMMERS; 0.1 FOR SINGLE-ACTING AIR OPERATED OR DIESEL HAMMERS; AND 0.2 FOR DROP HAMMERS.

G = RATE OF BATTER (1/3, 1/4, ETC.)

EXISTING STRUCTURE VERIFICATION:

DETAILS AND DIMENSIONS SHOWN ON THESE PLANS PERTAINING TO THE EXISTING STRUCTURES HAVE BEEN OBTAINED FROM PLANS OF THE EXISTING STRUCTURES AND FROM FIELD OBSERVATIONS AND MEASUREMENTS. CONSEQUENTLY, THEY ARE INDICATIVE OF THE EXISTING STRUCTURES AND THE PROPOSED WORK BUT THEY SHALL BE CONSIDERED TENTATIVE AND APPROXIMATE. THE CONTRACTOR IS REFERRED TO CMS SECTIONS 102.05, 105.02 AND 513.04.

ITEM 512 - SEALING OF CONCRETE SURFACES (EPOXY-URETHANE), AS PER PLAN:

AFTER INSTALLATION OF SUPERSTRUCTURE UNITS AND PATCHING OF CONCRETE STRUCTURES PER ITEM 519, SEAL EXPOSED CONCRETE SURFACES OF ALL SUBSTRUCTURES UNITS. THE LIMITS OF SEALING SHALL INCLUDE:

A) THE FRONT FACE OF ABUTMENT BACKWALLS, FROM TOP TO BRIDGE SEAT, THE BRIDGE SEAT AND THE BREASTWALL DOWN TO THE GROUND LINE.

B) THE EXPOSED SURFACES OF ALL WINGWALLS AND RETAINING WALLS.

C) THE EXPOSED SURFACE OF PIERS EXCEPT FOR THE TOP OF PIER CAPS.

CONCRETE SEALER COLOR FOR PARAPETS AND ALL SUBSTRUCTURE ELEMENTS TO BE SW 7022 ALPACA ON BRIDGES 7,8,9,10,11, AND 12.

DOWELS:

UNLESS NOTED OTHERWISE IN THE PLANS, ALL DOWELS SHALL BE SET WITH A NONSHRINK, NONMETALLIC ENCAPSULATED ADHESIVE ANCHORAGE SYSTEM AS MANUFACTURED BY HILTI, INC OR AN APPROVED EQUAL. AT A MINIMUM, DOWEL HOLES DEPTHS AND SIZES SHALL BE AS PER MANUFACTURER'S RECOMMENDATIONS. ANCHORAGE SYSTEM SHALL MEET REQUIREMENTS SPECIFIED IN CMS SECTION 705.20.

APPROACH SLABS

FURNISH APPROACH SLABS CONFORMING TO CMS 526 EXCEPT CONCRETE SHALL BE IN ACCORDANCE WITH SUPPLEMENTAL SPECIFICATION ST-01 STRUCTURES PROJECT PROVISIONS, QC/QA CONCRETE, CLASS QSC2.

STAY-IN-PLACE FORMS

AT THE CONTRACTOR'S OPTION GALVANIZED STEEL STAY-IN-PLACE (SIP) FORMS MAY BE USED AS FALSEWORK FOR THE CONSTRUCTION OF THE CONCRETE DECK.

THE FOLLOWING IS A LISTING OF THE REQUIREMENTS FOR USE OF SIP FORMS:

DESIGN, FURNISH AND INSTALL PERMANENT GALVANIZED STEEL STAY-IN-PLACE (SIP) FABRICATED METAL FORMS FOR CONCRETE DECK SLABS OF ALL INTERIOR BAYS OF BEAMS ACCORDING TO CMS SECTIONS 508.01 AND 508.02 EXCEPT AS MODIFIED BY THESE NOTES. SIP FORMS SHALL NOT BE USED AT OVERHANGS AND WITHIN FIVE FEET OF ALL EXPANSION JOINTS AND SCUPPERS. THE CONTRACTOR MAY ELECT TO FURNISH, INSTALL AND REMOVE, REMOVABLE FORMS TO ACCOMMODATE SKEWED ENDS OF A DECK.

DESIGN SIP FORMS TO SUPPORT THE DEAD WEIGHT OF SIP FORMS, REINFORCEMENT, WET CONCRETE PLUS 50 PSF FOR CONSTRUCTION LIVE LOADS AND MEET THE DEFLECTION SPECIFICATIONS OF 508.01. ALL FLUTES SHALL BE FILLED WITH THE SAME CONCRETE MIX BEING POURED WITH THE DECK.

FABRICATE THE SIP FORMING SYSTEM ACCORDING TO ITEM 513 EXCEPT THAT FABRICATOR PRE-QUALIFICATION IS NOT REQUIRED. SUBMIT MILL TEST REPORTS FOR THE SIP FORMS ACCORDING TO 513.08. SUBMIT SHOP DRAWINGS AND DESIGN CALCULATIONS FOR THE SIP FORMS ACCORDING TO 513.06. FURNISH FORM MATERIALS CONFORMING TO ASTM A653 WITH G235 COATING WEIGHT WITH A MINIMUM THICKNESS OF 20 GAGE. HOT DIP GALVANIZE ALL HARDWARE, HANGERS, AND INCIDENTALS.

DO NOT WELD SIP FORMS OR THEIR SUPPORTS TO THE STEEL BRIDGE MEMBERS WITHIN THE LIMITS MARKED AS TENSION ZONES SHOWN IN THE PLANS.

ACHIEVE A ONE-INCH MINIMUM BEARING LENGTH ON ALL SUPPORTS OF A FLUTE.

PLACE CONCRETE ACCORDING TO THE CONTRACT SPECIFICATIONS:
- FILL THE ENTIRE FORM WITH DECK CONCRETE.
- UTILIZE PROPER CONSTRUCTION TECHNIQUES TO PREVENT VOIDS AND HONEYCOMBS ESPECIALLY AT CONSTRUCTION JOINTS, EXPANSION JOINTS, FLUTES, AND ENDS OF SIP FORM SHEETS.

INSTALL SIP FORMS ACCORDING TO THESE NOTES:

1. PROVIDE THE ENGINEER WITH A WRITTEN INSTALLATION AND INSPECTION PROCEDURE. INCLUDE METHODS FOR ADJUSTING SUPPORT HEIGHTS, SIP ATTACHMENT SEQUENCE, PLACEMENT METHODS USED TO MINIMIZE COATING DAMAGE, COATING REPAIR METHODS, ACCEPTABLE TOLERANCES AND INSPECTION CRITERIA

2. FIELD CUT SIP FORMS USING MECHANICAL CUTTING METHODS. THERMAL CUTTING IS NOT PERMITTED.

3. PLACE FORM SUPPORTS IN DIRECT CONTACT WITH THE TOP OF THE BRIDGE'S STRUCTURAL MEMBERS.

4. SET THE HEIGHT OF THE FORM SUPPORTS SO SIP FORMS DO NOT REST DIRECTLY ON THE BRIDGE'S STRUCTURAL MEMBERS AND TO DEVELOP THE SPECIFIED DECK THICKNESS.

5. PLACE SIP FORMS DIRECTLY ON THE SUPPORTS

6. CONNECT SIP FORMS TO SUPPORTS BEFORE USING THE SIP AS A WORKING SURFACE AND BEFORE THE END OF EACH WORK SHIFT.

7. PROVIDE SAFETY STOPS TO ELIMINATE HAZARDS FROM SUDDEN UPLIFT AND LATERAL MOVEMENT.

IN ADDITION TO THE REQUIREMENTS OF 105.111 FURNISH, ERECT, AND MOVE APPROPRIATE EQUIPMENT OF SCAFFOLDING TO ALLOW THE FOLLOWING INSPECTION ACCESS. ACCESS AND THE SPECIFIED INSPECTIONS ARE NOT ELIGIBLE FOR EXTRA PAYMENT. PROVIDE COMPLETED INSPECTION CHECK LISTS TO DOCUMENT THE FOLLOWING INSPECTIONS:

1. PRIOR TO PLACING CONCRETE VISUALLY INSPECT SIP FORMS FOR DAMAGE.

2. TWO DAYS AFTER CONCRETE PLACEMENT, TEST DECK FOR SOUNDNESS OR BONDING OF THE FORMS BY SOUNDING ON THE FORMS WITH A HAMMER. SOUND ALL SURFACES OF AT LEAST 10% OF THE PANELS WITH THE ENGINEER.

3. REMOVE SIP FORMS IN AREAS WITH DOUBTFUL SOUNDNESS OR BONDING FOR THE ENGINEER'S VISUAL INSPECTION. DO NOT REPLACE SIP FORMS REMOVED FOR INSPECTION. REMOVE FORMS SO THAT ADJACENT FORMS OR WORK IS NOT DEBONDED OR OTHERWISE DAMAGED.

4. IF DEFECTS ARE DISCOVERED DURING THE SPECIFIED INSPECTIONS, TEST THE COMPLETE DECK AND PROPOSE REPAIR OR REMOVAL METHODS ACCEPTABLE TO THE DEPARTMENT. THE DEPARTMENT MAY REQUIRE ADVANCED NON-DESTRUCTIVE TESTING METHODS SUCH AS GROUND PENETRATING RADAR TO VERIFY THE DECK CONDITION ACCORDING TO CMS 105.11.

CONCRETE PARAPETS:

AS SOON AS A CONCRETE SAW CAN BE OPERATED WITHOUT DAMAGING THE FRESHLY PLACED CONCRETE, SAWCUT 1¼" DEEP CONTROL JOINTS INTO THE PERIMETER OF THE CONCRETE PARAPET STARTING AND ENDING AT THE ELEVATION OF THE CONCRETE DECK. PLACE THE SAWCUTS AT A MINIMUM OF 6 FEET AND A MAXIMUM OF 10 FEET CENTERS. USE AN EDGE GUIDE, FENCE, OR JIG TO ENSURE THAT THE CUT JOINT IS STRAIGHT, TRUE, AND ALIGNED ON ALL FACES OF THE PARAPET. THE JOINT WIDTH SHALL BE THE WIDTH OF THE SAW BLADE, A NOMINAL WIDTH OF ¼ INCH. SEAL THE PERIMETER OF THE DEFLECTION CONTROL JOINT TO A MINIMUM DEPTH OF 1 INCH WITH A POLYURETHANE OR POLYMERIC MATERIAL CONFORMING TO ASTM C920, TYPE S. LEAVE THE BOTTOM ½ INCH OF THE INSIDE AND OUTSIDE FACE UNSEALED TO ALLOW WATER TO ESCAPE.

INSPECTION OF EXISTING STRUCTURAL STEEL:

THE ENGINEER WILL VISUALLY INSPECT ALL EXISTING BUTT-WELDED SPLICES AND/OR TOP FLANGE COVER PLATE FILLET WELDS TO ENSURE THE WELDS, PLATES AND BEAMS OR GIRDERS ARE FREE OF DEFECTS AND CRACKS. IF NECESSARY, REMOVE ALL DECK SLAB HAUNCH FORMS IMMEDIATELY ADJACENT TO SUCH WELDS THAT MAY INTERFERE WITH THE ENGINEER'S INSPECTION. THE INSPECTION WILL NOT TAKE PLACE UNTIL THE TOP FLANGES ARE CLEANED ACCORDING TO 511.10, BUT IT WILL BE DONE BEFORE THE DECK SLAB REINFORCEMENT IS INSTALLED. THE ENGINEER WILL REPORT ALL CRACKS FOUND TO THE OFFICE OF CONSTRUCTION ADMINISTRATION, BRIDGE CONSTRUCTION SPECIALIST, ALONG WITH SPECIFIC INFORMATION ON LOCATION OF THE CRACKS, LENGTH, AND DEPTH SO AN EVALUATION AND REPAIR OR REPLACEMENT RECOMMENDATION CAN BE MADE.

ITEM 513 - STRUCTURAL STEEL, MISC.: BEAM RETROFIT PLATES

THE EXISTING BEAMS SHALL HAVE RETROFIT PLATES INSTALLED AS INDICATED IN THE PLANS. STEEL SHALL BE ASTM A709, GRADE 50 (MINIMUM YIELD 50,000 PSI) AND BOLTS SHALL BE ASTM 325. BOLT HOLES IN THE RETROFIT PLATES SHALL BE DRILLED IN THE SHOP. TEMPLATES SHALL BE USED FOR THE DRILLING OF THE HOLES IN THE EXISTING BEAMS. THE WELDS IN THE EXISTING BEAM OR PROTRUSIONS IN THE FLANGE AREA SHALL BE GROUND FLUSH WHERE NECESSARY TO ENSURE PROPER CONTACT FIT. THE GRINDING SHALL BE IN THE DIRECTION OF THE LONGITUDINAL AXIS. RETROFIT PLATES SHALL FIT FLAT AGAINST THE EXISTING BEAM AND FILL PLATES SHALL BE USED TO COMPENSATE FOR ANY MISALIGNMENT OF MORE THAN 1/16". AFTER HOLES ARE DRILLED IN THE BEAM BUT BEFORE FINAL ASSEMBLY, THE CONTACT SURFACES OF THE EXISTING BEAM AND THE ENTIRE SURFACE OF THE RETROFIT PLATES AND FILLER PLATES SHALL BE PREPARED AND GIVEN A PRIME COAT AS PER 514. ALL BURS AND FINS PRODUCED BY DRILLING OF HOLES SHALL BE REMOVED. PAINT SHALL BE REMOVED NEAR WHITE METAL (Sa 2 1/2). BOLTS SHALL BE INSTALLED AND TIGHTENED, BOLTS FOR THE LOWER FLANGES SHALL BE INSTALLED WITH HEADS DOWN.

NO.	REVISIONS	DATE
	RECORD DRAWINGS	08/09/13

DESIGN AGENCY: WALSH HNTB (WALSH CONSTRUCTION)

CLEVELAND'S INNERBELT BRIDGE 90 — OHIO DEPARTMENT OF TRANSPORTATION

BRIDGES 7 8
BRIDGE 9
BRIDGES 10 11 12

STRUCTURE GENERAL NOTES - 2

CUY-90-1628 L/R; CUY-90-1640; CUY-90-1651 L/R; CUY-77-1597 L
I-90 EASTBOUND AND WESTBOUND OVER E 9TH STREET

DESIGNED	DRAWN	REVIEWED	DATE
BTA	BTA	JOL	01-18-11
CHECKED	CHECKED	STRUCTURE FILE NUMBER	
NJ	NJ	1807498 / 1807714	

CUY-90-14.90
PID No. 77332/ 85531

2B / 38

090_1651LGN002.dgn 1/8/2016 11:30:11 AM rstriegel

STRUCTURE GENERAL NOTES

DECK PLACEMENT DESIGN ASSUMPTIONS:

THE FOLLOWING ASSUMPTIONS OF CONSTRUCTION MEANS AND METHODS WERE MADE FOR THE ANALYSIS AND DESIGN OF THE SUPERSTRUCTURE. THE CONTRACTOR IS RESPONSIBLE FOR THE DESIGN OF THE FALSEWORK SUPPORT SYSTEM WITHIN THESE PARAMETERS AND WILL ASSUME RESPONSIBILITY FOR SUPERSTRUCTURE ANALYSIS FOR DEVIATION FROM THESE DESIGN ASSUMPTIONS.

AN EIGHT WHEEL FINISHING MACHINE WITH A MAXIMUM WHEEL LOAD OF "A" KIPS FOR A TOTAL MACHINE LOAD OF "B" KIPS.

BRIDGE	"A" (KIPS)	"B" (KIPS)	
CUY-90-1628L	1.16	9.28	**
CUY-90-1628R	1.16	9.28	**
CUY-90-1640	1.14	9.12	
CUY-77-1597L	0.95	7.6	
CUY-90-1651L	0.95	7.6	
CUY-90-1651R (GIRDER N AND U)	1.14	9.12	
CUY-90-1651R (GIRDER W AND BEAM AA)	0.95	7.6	**

A MINIMUM OUT-TO-OUT WHEEL SPACING AT EACH END OF THE MACHINE OF 103".

A MAXIMUM SPACING OF OVERHANG FALSEWORK BRACKETS OF 48 IN.

A MAXIMUM DISTANCE FROM THE CENTERLINE OF THE FASCIA GIRDER TO THE FACE OF THE SAFETY HANDRAIL OF 65".

** - LOADS PROVIDED ARE BASED ON A MAXIMUM DECK OVERHANG OF 3'-0" FROM THE CENTERLINE OF FASCIA BEAM TO THE EDGE OF SLAB. CONTRACTOR TO PROVIDE TEMPORARY BRACING FOR OVERHANGS LARGER THAN 3'-0" AT BRACKET LOCATIONS TO PREVENT GIRDER WARPING AND EXCESSIVE THINNING OF THE DECK SLAB.

ITEM 513 - STRUCTURAL STEEL MEMBERS, LEVEL UF , AS PER PLAN:

ALL REQUIREMENTS OF 513 APPLY TO SHOP FABRICATED MEMBERS. PERFORM WORK FOR FIELD FABRICATED MEMBERS ACCORDING TO ITEM 513, EXCEPT AS MODIFIED HEREIN. THE DEPARTMENT WILL NOT REQUIRE THE CONTRACTOR PERFORMING FIELD FABRICATION TO BE PRE-QUALIFIED AS SPECIFIED IN SUPPLEMENT 1078. SUBMIT A WRITTEN LETTER OF MATERIAL ACCEPTANCE, 501.06, TO THE INDEPENDENT QUALITY FIRM (IQF). PROVIDE SHOP DRAWINGS ACCORDING TO 513.04 OR SUPPLY THE IQF WITH "AS-BUILT" DRAWINGS MEETING 513.04 AFTER COMPLETION OF FIELD FABRICATION. THE IQF WILL REVIEW THE SUBMITTED DRAWINGS FOR CONCURRENCE WITH THE FINAL AS-BUILT CONDITION. IF THE IQF IS SATISFIED WITH THE "AS-BUILT" DRAWINGS AND THE DELIVERED MATERIALS, SUPPLY A COPY OF THE DRAWINGS, STAMPED AND DATED, ALONG WITH MICROFILM, TO THE STRUCTURAL, WELDING AND METALS SECTION OF THE OFFICE OF MATERIAL MANAGEMENT FOR RECORD PURPOSES.

ITEM 519 - PATCHING CONCRETE STRUCTURES, AS PER PLAN:

PRIOR TO THE SURFACE CLEANING SPECIFIED IN 519.04 AND WITHIN 24 HOURS OF PLACING PATCHING MATERIAL, BLAST CLEAN ALL SURFACES TO BE PATCHED INCLUDING THE EXPOSED REINFORCING STEEL. ACCEPTABLE METHODS INCLUDE HIGH-PRESSURE WATER BLASTING WITH OR WITHOUT ABRASIVES IN THE WATER, ABRASIVE BLASTING WITH CONTAINMENT, OR VACUUM ABRASIVE BLASTING.

CONTRACTOR SHALL DETERMINE AREAS REQUIRING PATCHING USING NON-DESTRUCTIVE METHODS (SOUNDING) ON ALL SUBSTRUCTURE UNITS REQUIRED BY PROJECT SCOPE. CONCRETE REPAIRS SHALL BE INCORDANCE WITH SECTION 519 OF THE CMS.

TABLES OF AREAS ESTIMATED PER SCOPE VS. ACTUAL AREAS DETERMINED

CUY-90-1628L/1628R (BRIDGE 7/8)

SUBSTRUCTURE UNIT	BL7/BL8 ESTIMATED (SQ. FT.)	ACTUAL (SQ. FT.)
REAR ABUTMENT	200/100	121.8
PIER 1	30/NOT REQUIRED	64.3
PIER 2	75/NOT REQUIRED	44.2
FORWARD ABUTMENT	50/150	79.3

CUY-90-1640 (BRIDGE 9)

SUBSTRUCTURE UNIT	ESTIMATED (SQ. FT.)	ACTUAL (SQ. FT.)
REAR ABUTMENT	100	84.8
PIER 1	150	33.9
PIER 2	25	53.9
FORWARD ABUTMENT	100	24.9

CUY-77-1597L (BRIDGE 10)

SUBSTRUCTURE UNIT	ESTIMATED (SQ. FT.)	ACTUAL (SQ. FT.)
REAR ABUTMENT	70	42.3
PIER 1	NOT REQUIRED	2.3
PIER 2	NOT REQUIRED	NOT REQUIRED
PIER 3	NOT REQUIRED	19.7
FORWARD ABUTMENT	50	17.6

CUY-77-1651L (BRIDGE 11)

SUBSTRUCTURE UNIT	ESTIMATED (SQ. FT.)	ACTUAL (SQ. FT.)
REAR ABUTMENT	50	23.2
PIER 1	25	37.0
PIER 2	20	NOT REQUIRED
PIER 3	NOT REQUIRED	36.0
FORWARD ABUTMENT	50	26.4

CUY-77-1651R (BRIDGE 12)

SUBSTRUCTURE UNIT	ESTIMATED (SQ. FT.)	ACTUAL (SQ. FT.)
REAR ABUTMENT	50	144.0
PIER 1	25	50.5
PIER 2	20	NOT REQUIRED
PIER 3	NOT REQUIRED	16.5
FORWARD ABUTMENT	50	14.5

NO.	REVISIONS	DATE
	RECORD DRAWINGS	08/09/13

DESIGN AGENCY: WALSH HNTB (WALSH CONSTRUCTION)

CLEVELAND'S INNERBELT BRIDGE 90 — OHIO DEPARTMENT OF TRANSPORTATION

BRIDGES 7 8
BRIDGE 9
BRIDGES 10 11 12

STRUCTURE GENERAL NOTES - 3

CUY-90-1628 L/R; CUY-90-1640; CUY-90-1651 L/R; CUY-77-1597 L
I-90 EASTBOUND AND WESTBOUND OVER E 9TH STREET

DESIGNED	DRAWN	REVIEWED	DATE
BTA	BTA	JOL	01-18-11
CHECKED	CHECKED	STRUCTURE FILE NUMBER	
NJ	NJ	1807498 / 1807714	

CUY-90-14.90
PID No. 77332/85531

090_1651LGN003.dgn 1/8/2016 11:30:17 AM rstriegel

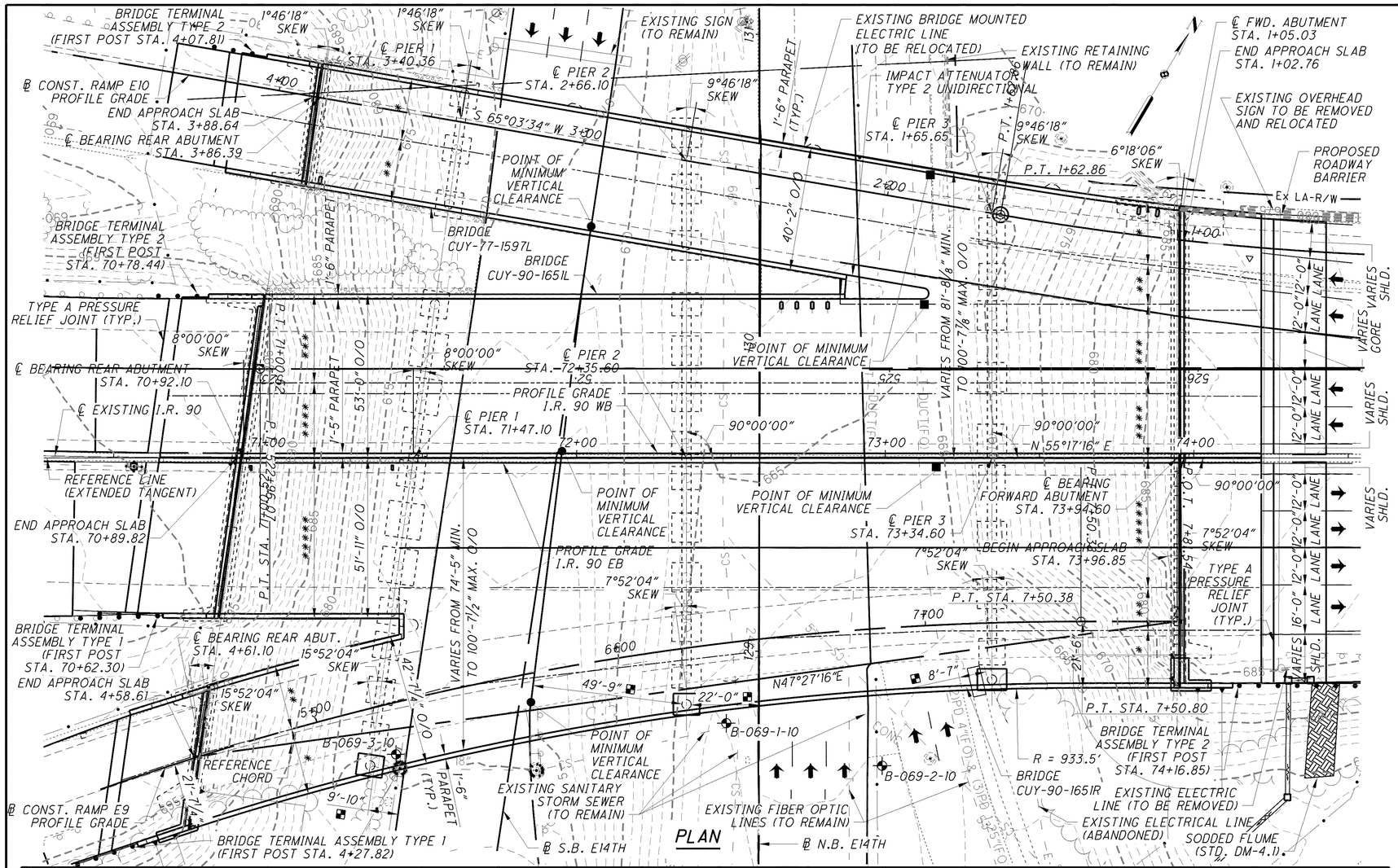

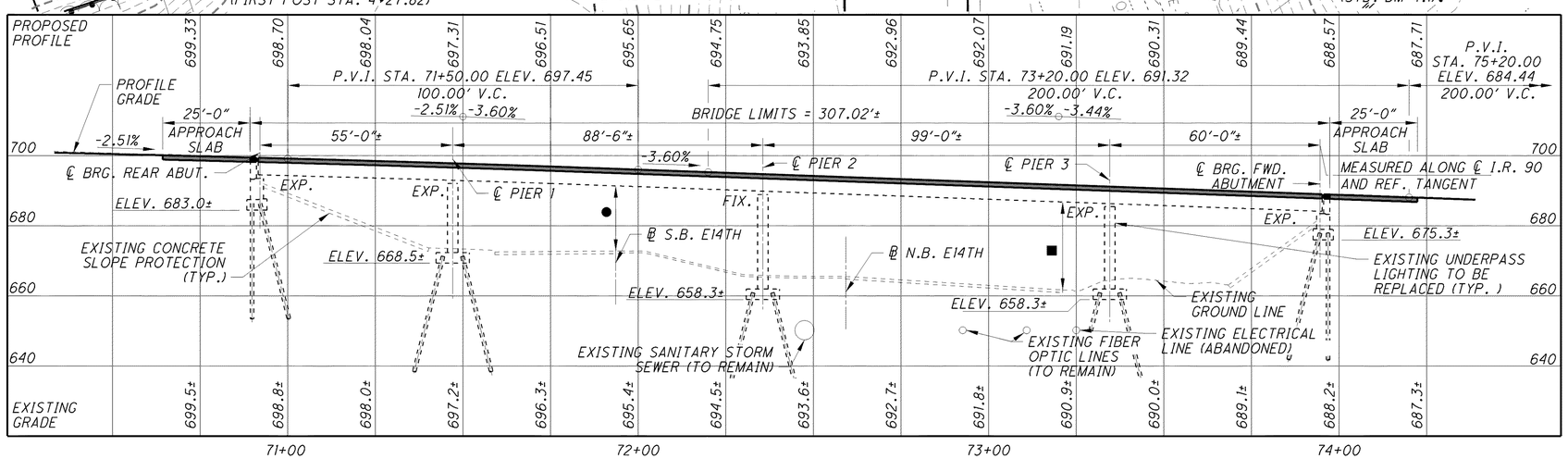

PROFILE ALONG EXISTING ℄ I.R. 90

(PROFILE ALONG ℄ I.R. 90 MATCHES PROFILE GRADE I.R. 90 WB AND EB)

NOTES

EARTHWORK LIMITS SHOWN ARE APPROXIMATE. ACTUAL SLOPES SHALL CONFORM TO PLAN CROSS SECTIONS.

EXISTING ELEVATIONS FOR CUY-90-1651L AND CUY-77-1597L WERE ADJUSTED TO THE CURRENT PROJECT SURVEY ELEVATIONS FOR REAR ABUTMENT, PIER 1, PIER 2, PIER 3 AND FORWARD ABUTMENT THE ELEVATION ADJUSTMENT IS APPROXIMATELY 0.94, 0.76, 0.70, 0.66 AND 0.64 FEET LOWER RESPECTIVELY THAN EXISTING ELEVATIONS SHOWN ON THE ORIGINAL BRIDGE PLANS.

EXISTING ELEVATIONS FOR CUY-90-1651R WERE ADJUSTED TO THE CURRENT PROJECT SURVEY ELEVATIONS FOR REAR ABUTMENT, PIER 1, PIER 2, PIER 3 AND FORWARD ABUTMENT. THE ELEVATION ADJUSTMENT IS APPROXIMATELY 0.98, 0.82, 0.62, 0.65 AND 0.72 FEET LOWER RESPECTIVELY THAN EXISTING ELEVATIONS SHOWN ON THE ORIGINAL BRIDGE PLANS.

FOR ADDITIONAL DRAINAGE DETAILS SEE DRAINAGE PLANS.

FOR SITE PLAN-2, SEE SHEET 4/38.

FOR BENCHMARK DATA, SEE SHEET 4/38.

LEGEND

* - PHASE 1, STEP 1 CONSTRUCTION
** - PHASE 1, STEP 2 CONSTRUCTION
*** - PHASE 1, STEP 3 CONSTRUCTION
**** - PHASE 1, STEP 4 CONSTRUCTION
***** - PHASE 1, STEP 5 CONSTRUCTION
2'-0" REQUIRED MINIMUM HORIZONTAL CLEARANCE
15'-0" REQUIRED MINIMUM VERTICAL CLEARANCE
16'-9" ACTUAL MINIMUM VERTICAL CLEARANCE (CUY-77-1597 L)
18'-6" ACTUAL MINIMUM VERTICAL CLEARANCE (CUY-90-1651 L)
15'-0" ACTUAL MINIMUM VERTICAL CLEARANCE (CUY-90-1651 R)
15'-0" REQUIRED MINIMUM VERTICAL CLEARANCE
18'-7" ACTUAL MINIMUM VERTICAL CLEARANCE (CUY-77-1597 L)
19'-11" ACTUAL MINIMUM VERTICAL CLEARANCE (CUY-90-1651 L)
21'-9" ACTUAL MINIMUM VERTICAL CLEARANCE (CUY-90-1651 R)
BORING LOCATION

EXISTING STRUCTURE

TYPE: CONTINUOUS WELDED STEEL GIRDER WITH REINFORCED CONCRETE DECK AND SUBSTRUCTURES

SPANS: 55'-0"±, 88'-6"±, 99'-0"±, AND 60'-0"± MEASURED ALONG ℄ I.R. 90 AND REFERENCE LINE
ROADWAY: VARIES, TOE/TOE OF PARAPETS
LOADING: CF-2000-57
SKEW: VARIES
APPROACH SLABS: 25'-0" LONG (AS-1-54)
ALIGNMENT: CURVE 1° 30' 00" LT. AND TANGENT
CROWN: VARIES
WEARING SURFACE: 2¼"± MICRO-SILICA OVERLAY
STRUCTURE FILE NUMBERS: 1807919, 1807900, AND 1807803
DATE BUILT: 1963, REHAB 1977, OVERLAY 2000
DISPOSITION: TO BE WIDENED AND REDECKED

PROPOSED STRUCTURE

TYPE: CONTINUOUS WELDED STEEL GIRDER WITH COMPOSITE REINFORCED CONCRETE DECK. WIDENED REINFORCED CONCRETE SUBSTRUCTURES (CUY-90-1651R ONLY)
SPANS: 55'-0"±, 88'-6"±, 99'-0"±, AND 60'-0"± MEASURED ALONG ℄ I.R. 90 AND REFERENCE LINE
ROADWAY: VARIES, TOE/TOE OF PARAPETS

SKEW: VARIES
APPROACH SLABS: 25'-0" LONG (AS-1-81 MODIFIED)
ALIGNMENT: CURVE 1° 30' 00" LT. AND TANGENT
CROWN: VARIES
WEARING SURFACE: 1" MONOLITHIC CONCRETE
STRUCTURE FILE NUMBER: 1807919 1807900 1807803
COORDINATES: LATITUDE N 41° 29' 46"
LONGITUDE W 81° 40' 40"

NO.	REVISIONS	DATE
	RECORD DRAWINGS	03-14-11

DESIGN AGENCY: WALSH HNTB — WALSH CONSTRUCTION

CUYAHOGA COUNTY
STA. 70+89.82
STA. 73+96.85

CLEVELAND'S INNERBELT BRIDGE — OHIO DEPARTMENT OF TRANSPORTATION

BRIDGE 10
BRIDGE 11
BRIDGE 12

SITE PLAN 1

BRIDGE NO. CUY-77-1597 L AND CUY-90-1651 L/R
I-90 EB, I-90WB AND I-77SB RAMP OVER E 14TH STREET

DESIGNED	DRAWN	REVIEWED	DATE
RSB/KG	RSB/KG	JOL	03-11-11
CHECKED	CHECKED	STRUCTURE FILE NUMBER	
JRS	NJ	1807919/1807900/1807803	

CUY-90-14.90
PID No. 77332/85531

090_1651LSP001.dgn 1/11/2016 4:42:23 PM rstriegel

DESIGN TRAFFIC

CUY-90-1651 L:
(I.R. 90 WB)

2015 ADT = 48,000
2015 ADTT = 5,200
2035 ADT = 47,000
2035 ADTT = 5,500

CUY-77-1597 L:
(RAMP E10)

2015 ADT = 22,200
2015 ADTT = 3,250
2035 ADT = 23,500
2035 ADTT = 3,500

CUY-90-1651 R:
(I.R. 90 EB)

2015 ADT = 45,000
2015 ADTT = 4,050
2035 ADT = 48,000
2035 ADTT = 4,320

CUY-90-1651 R:
(RAMP E9)

2015 ADT = 18,300
2015 ADTT = 2,380
2035 ADT = 19,200
2035 ADTT = 2,500

HORIZONTAL CURVE DATA

EXISTING I.R. 90 CURVE DATA:

P.I. = STA. 67+01.04
Δ = 12° 01′ 44″ (LT.)
Dc = 01° 30′ 00″
R = 3819.72′
T = 402.44′
L = 801.92′
E = 21.14′

CONST. RAMP E10

P.I. = STA. 0+81.63
Δ = 9° 46′ 18″ (RT.)
Dc = 6° 00′ 00″
R = 954.93′
T = 81.63′
L = 162.86′
E = 3.48′

CONST. RAMP E9

P.I. = STA. 5+68.49
Δ = 22° 06′ 18″ (RT.)
Dc = 6° 00′ 00″
R = 954.93′
T = 186.53
L = 368.42
E = 18.05

ROADWAY INTERSECTION POINTS

℄ CONST. RAMP E9 STA. 5+68.68 =
℄ S.B. E14TH STA. 228+25.12

℄ EXISTING I.R. 90 STA. 71+93.39 =
℄ S.B. E14TH STA. 228+96.15

℄ CONST. RAMP E10 STA. 2+93.48 =
℄ S.B. E14TH STA. 229+89.26

℄ CONST. RAMP E10 STA. 2+42.13 =
℄ N.B. E14TH STA. 130+54.95

℄ EXISTING I.R. 90 STA. 72+59.16 =
℄ N.B. E14TH STA. 129+62.65

℄ CONST. RAMP E9 STA. 6+45.88 =
℄ N.B. E14TH STA. 129+03.93

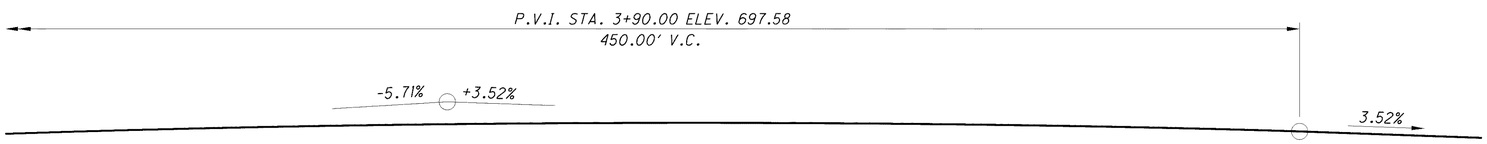

PROFILE ALONG ℄ CONST. RAMP E10

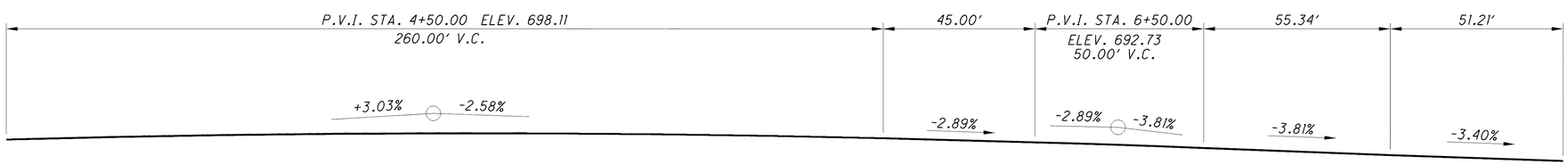

PROFILE ALONG ℄ CONST. RAMP E9

NOTE:

FOR COMPLETE RAMP PROFILES, SEE BUILDABLE UNIT MOT PH1 - STEPS 1 & 2.

BORING LOCATIONS

BORING	STATION	OFFSET	TOP OF ROCK
B-069-1-10	72+48.47	86.0′ RT.	NOT ENCOUNTERED
B-069-2-10	72+98.97	99.7′ RT.	
B-069-3-10	71+41.48	96.1′ RT.	

FOUNDATION DATA

REAR AND FORWARD ABUTMENT PILES SHALL BE 12″ ϕ CAST IN PLACE REINFORCED CONCRETE PILES AND HAVE AN ULTIMATE BEARING VALUE OF 75 TONS PER PILE WITH AN ESTIMATED LENGTH OF 45′ FOR THE REAR ABUTMENT AND 55′ FOR THE FORWARD ABUTMENT. PIER PILES SHALL BE 14″ ϕ CAST IN PLACE REINFORCED CONCRETE PILES AND HAVE AN ULTIMATE BEARING VALUE OF 109 TONS PER PILE WITH AN ESTIMATED LENGTH OF 75′ AT PIER 1 AND 90′ AT PIER 2 AND PIER 3.

PROPOSED WORK

REMOVE EXISTING NON-COMPOSITE BRIDGE DECK IN STAGES; REMOVE PORTIONS OF EXISTING ABUTMENTS; MODIFY ABUTMENTS AND WIDEN EXISTING PIERS AND ABUTMENTS IN STAGES; INSTALL NEW BEARINGS AND ROLLED BEAMS; CONSTRUCT NEW COMPOSITE BRIDGE DECK IN STAGES; REMOVE AND REPLACE EXISTING APPROACH SLABS IN STAGES.

BENCHMARK DATA

BM #4 STA. 72+34.4 (℄ EXISTING I.R. 90), ELEV. 669.18, OFFSET 129.3 LT.
CHISELED "X" ON N BOLT OF LIGHT POLE AT E. 14TH AND I-90
BM #5 STA. 66+28.4 (℄ EXISTING I.R. 90), ELEV. 664.68, OFFSET 198.2 LT.
CHISELED SQUARE AT SE CORNER OF CONCRETE AROUND A SQUARE CATCH BASIN BETWEEN I-90 W AND I-77 S RAMPS

NO.	REVISIONS	DATE
	RECORD DRAWINGS	04-04-11

DESIGN AGENCY: WALSH HNTB (WALSH CONSTRUCTION)

CUYAHOGA COUNTY
STA. 70+89.82
STA. 73+96.85

CLEVELAND'S INNERBELT BRIDGE 90 — OHIO DEPARTMENT OF TRANSPORTATION

BRIDGE 10
BRIDGE 11
BRIDGE 12

SITE PLAN 2

BRIDGE NO. CUY-77-1597 L AND CUY-90-1651 L/R
I-90 EB, I-90WB AND I-77SB RAMP OVER E 14TH STREET

DESIGNED RSB/KG | CHECKED JRS | DRAWN RSB/KG | CHECKED JTW | REVIEWED JOL | DATE 03-11-11 | STRUCTURE FILE NUMBER 1807919/1807900/1807803

CUY-90-14.90
PID No. 77332/85531

4/38

4/38

090_1651L SP002.dgn 1/8/2016 11:30:43 AM rstriegel

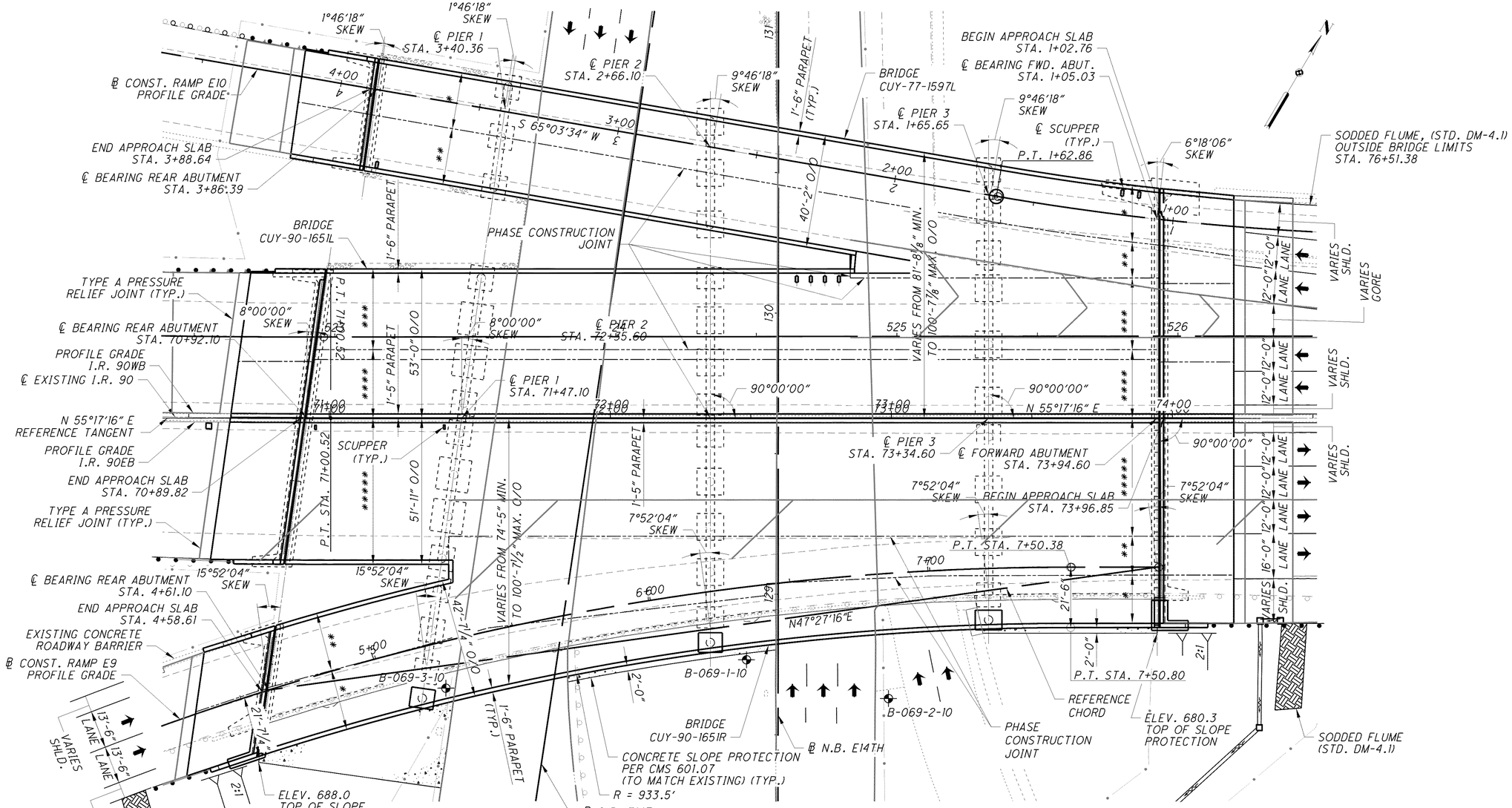

PLAN

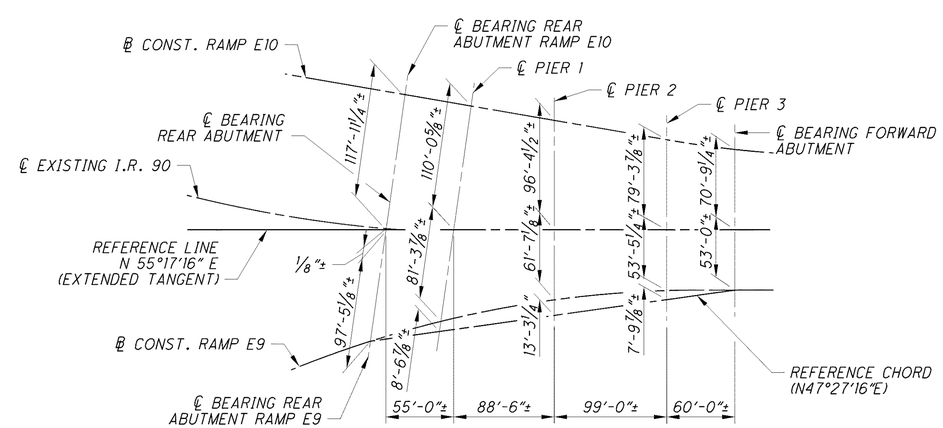

GEOMETRIC LAYOUT

LEGEND

* - PHASE 1, STEP 1 CONSTRUCTION
** - PHASE 1, STEP 2 CONSTRUCTION
*** - PHASE 1, STEP 3 CONSTRUCTION
**** - PHASE 1, STEP 4 CONSTRUCTION
***** - PHASE 1, STEP 5 CONSTRUCTION

NO.	REVISIONS	DATE
	RECORD DRAWINGS	03-14-11

DESIGN AGENCY: WALSH HNTB (WALSH CONSTRUCTION)

CLEVELAND'S INNERBELT BRIDGE 90 — OHIO DEPARTMENT OF TRANSPORTATION

BRIDGE 10
BRIDGE 11
BRIDGE 12

GENERAL PLAN

BRIDGE NO. CUY-77-1597 L AND CUY-90-1651 L/R
I-90 EB, I-90WB AND I-77SB RAMP OVER E 14TH STREET

DESIGNED	DRAWN	REVIEWED	DATE
RSB/KG	RSB	JOL	03-11-11
CHECKED	CHECKED	STRUCTURE FILE NUMBER	
JRS	NJ	1807919/1807900/1807803	

CUY-90-14.90
PID No. 77332/85531

5/38

5/38

090_1651LGP001.dgn 1/11/2016 4:45:40 PM rstriegel

SUGGESTED CONSTRUCTION SEQUENCE

PHASE 1, STEP 1

1. WIDEN ABUTMENTS, WIDEN PIERS, ERECT BEAM AA AND HAND TIGHTEN ERECTION BOLTS FOR CROSSFRAMES (EXCEPT FIELD SPLICES 2 AND 3) BETWEEN EXISTING GIRDER Z AND BEAM AA TO THE LIMITS SHOWN ON THE PLANS. (CUY-90-1651R ONLY)
2. INSTALL PORTABLE CONCRETE BARRIERS AS SHOWN IN THE PLANS.
3. DIRECT TRAFFIC AS SHOWN ON THE MAINTENANCE OF TRAFFIC PLANS.
4. CUT EXISTING CROSSFRAMES TO THE LIMITS SHOWN IN THE PLANS.
5. REMOVE EXISTING DECK, BARRIER CURB, APPROACH SLABS, TOP OF BACKWALLS AND WINGWALLS TO THE LIMITS SHOWN IN THE PLANS.
6. INSTALL SHEAR CONNECTORS.
7. INSTALL BENT PLATES FOR CROSSFRAMES BETWEEN EXISTING GIRDER Z AND BEAM AA AT FIELD SPLICES 2 AND 3 AND HAND TIGHTEN ERECTION BOLTS FOR CROSSFRAMES. (CUY-90-1651R ONLY)
8. CONSTRUCT DECK AND PARAPET AS SHOWN IN THE PLANS.
9. PERMANENTLY ATTACH CROSSFRAMES BETWEEN EXISTING GIRDER Z AND BEAM AA. (CUY-90-1651R ONLY)
10. REPAIR CUT CROSSFRAMES.
11. CONSTRUCT TOP OF BACKWALLS, APPROACH SLABS AND INSTALL EXPANSION JOINTS AS SHOWN IN THE PLANS.
12. SEAL CONCRETE SURFACES TO THE LIMIT SHOWN ON THE PLANS.

PHASE 1, STEP 2

1. INSTALL PORTABLE CONCRETE BARRIERS AS SHOWN IN THE PLANS.
2. DIRECT TRAFFIC AS SHOWN ON THE MAINTENANCE OF TRAFFIC PLANS.
3. CUT EXISTING CROSSFRAMES TO THE LIMITS SHOWN IN THE PLANS.
4. PROVIDE TEMPORARY BRACINGS FOR EXISTING GIRDER U IN SPAN 3. (CUY-90-1651R ONLY)
5. REMOVE EXISTING DECK, BARRIER CURB, APPROACH SLABS, TOP OF BACKWALLS AND WINGWALLS TO THE LIMITS SHOWN IN THE PLANS.
6. INSTALL SHEAR CONNECTORS.
7. CONSTRUCT DECK AND PARAPET AS SHOWN IN THE PLANS.
8. REPAIR CUT CROSSFRAMES.
9. CONSTRUCT TOP OF BACKWALLS, APPROACH SLABS AND INSTALL EXPANSION JOINTS AS SHOWN IN THE PLANS.
10. SEAL LONGITUDINAL JOINTS WITH HIGH MOLECULAR WEIGHT METHACRYLATE (HMWM).
11. SEAL CONCRETE SURFACES TO THE LIMITS SHOWN ON THE PLANS.

PHASE 1, STEP 3

1. INSTALL PORTABLE CONCRETE BARRIERS AS SHOWN IN THE PLANS.
2. DIRECT TRAFFIC AS SHOWN ON THE MAINTENANCE OF TRAFFIC PLANS.
3. CUT EXISTING CROSSFRAMES TO THE LIMITS SHOWN IN THE PLANS.
4. REMOVE EXISTING DECK, BARRIER CURB, APPROACH SLABS, TOP OF BACKWALLS AND WINGWALLS TO THE LIMITS SHOWN IN THE PLANS.
5. INSTALL SHEAR CONNECTORS.
6. CONSTRUCT DECK AND PARAPET AS SHOWN IN THE PLANS.
7. CONSTRUCT TOP OF BACKWALLS, APPROACH SLABS AND INSTALL EXPANSION JOINTS AS SHOWN IN THE PLANS.
8. SEAL CONCRETE SURFACES TO THE LIMITS SHOWN ON THE PLANS.

PHASE 1, STEP 4

1. INSTALL PORTABLE CONCRETE BARRIERS ON THE NEWLY CONSTRUCTED WORK AS SHOWN IN THE PLANS.
2. DIRECT TRAFFIC AS SHOWN ON THE MAINTENANCE OF TRAFFIC PLANS.
3. REMOVE EXISTING DECK, BARRIER CURB, APPROACH SLABS, TOP OF BACKWALLS AND WINGWALLS TO THE LIMITS SHOWN IN THE PLANS.
4. INSTALL SHEAR CONNECTORS.
5. CONSTRUCT DECK AND PARAPET AS SHOWN IN THE PLANS.
6. REPAIR CUT CROSSFRAMES.
7. CONSTRUCT CLOSURE POUR.
8. CONSTRUCT TOP OF BACKWALLS, APPROACH SLABS AND INSTALL EXPANSION JOINTS AS SHOWN IN THE PLANS.
9. SEAL LONGITUDINAL JOINTS WITH HIGH MOLECULAR WEIGHT METHACRYLATE (HMWM).
10. SEAL CONCRETE SURFACES TO THE LIMITS SHOWN ON THE PLANS.

PHASE 1, STEP 5

1. DIRECT TRAFFIC AS SHOWN ON THE MAINTENANCE OF TRAFFIC PLANS.
2. REMOVE PORTABLE CONCRETE BARRIERS AS SHOWN IN THE PLANS.
3. CUT EXISTING CROSSFRAMES TO THE LIMITS SHOWN IN THE PLANS.
4. REMOVE EXISTING DECK, BARRIER CURB, APPROACH SLABS, TOP OF BACKWALLS AND WINGWALLS TO THE LIMITS SHOWN IN THE PLANS.
5. INSTALL SHEAR CONNECTORS.
6. CONSTRUCT DECK AND PARAPET AS SHOWN IN THE PLANS.
7. REPAIR CUT CROSSFRAMES.
8. CONSTRUCT TOP OF BACKWALLS, APPROACH SLABS AND INSTALL EXPANSION JOINTS AS SHOWN IN THE PLANS.
9. SEAL LONGITUDINAL JOINTS WITH HIGH MOLECULAR WEIGHT METHACRYLATE (HMWM).
10. SEAL CONCRETE SURFACES TO THE LIMITS SHOWN ON THE PLANS.

NOTE:

1. FOR PHASE CONSTRUCTION DETAILS, SEE SHEETS 7/38 THRU 11/38.
2. FOR ADDITIONAL PORTABLE CONCRETE BARRIER DETAILS, SEE ODOT STANDARD DRAWING PCB-91.

NO.	REVISIONS	DATE
	RECORD DRAWINGS	03-14-11

DESIGN AGENCY: WALSH CONSTRUCTION / HNTB

CLEVELAND'S INNERBELT BRIDGE — OHIO DEPARTMENT OF TRANSPORTATION

BRIDGE 10
BRIDGE 11
BRIDGE 12

PHASE CONSTRUCTION DETAILS - 1

BRIDGE NO. CUY-77-1597 L AND CUY-90-1651 L/R
I-90 EB, I-90WB AND I-77SB RAMP OVER E 14TH STREET

DESIGNED	DRAWN	REVIEWED	DATE
RSB	RSB	JOL	03-11-11
CHECKED	CHECKED	STRUCTURE FILE NUMBER	
NJ	NJ	1807919/1807900/1807803	

CUY-90-14.90
PID No. 77332/85531

090_1651LPC001.dgn 1/8/2016 11:30:59 AM rstriegel

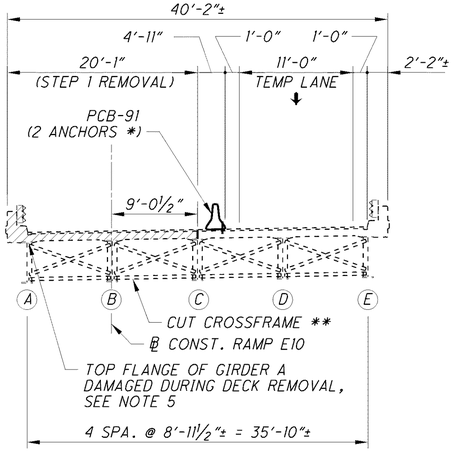

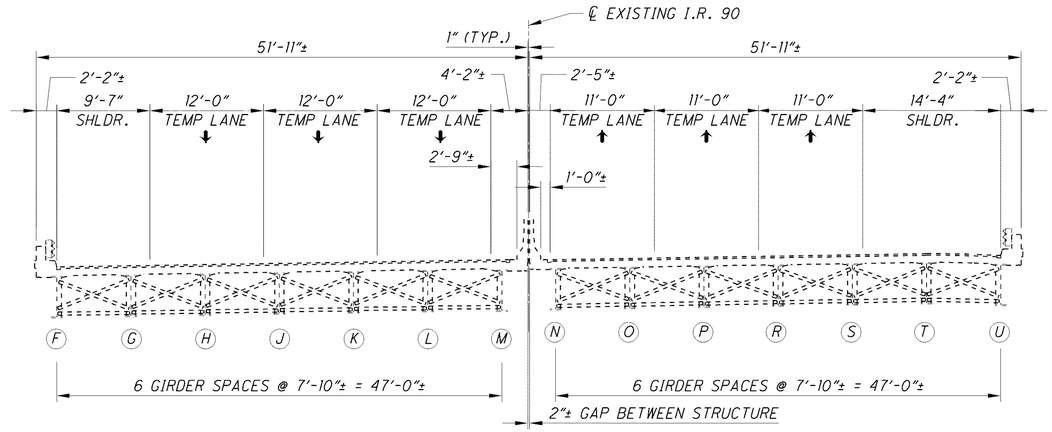

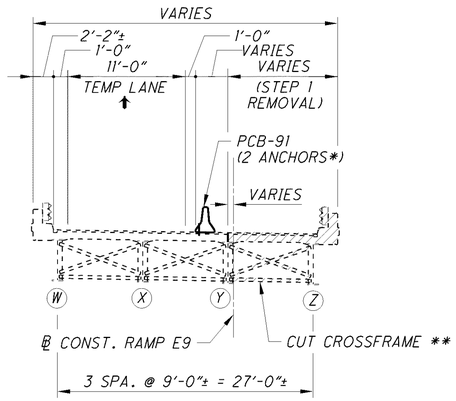

(DIMENSIONS APPLY TO RAMP SECTION ONLY)

PHASE 1, STEP 1 REMOVAL

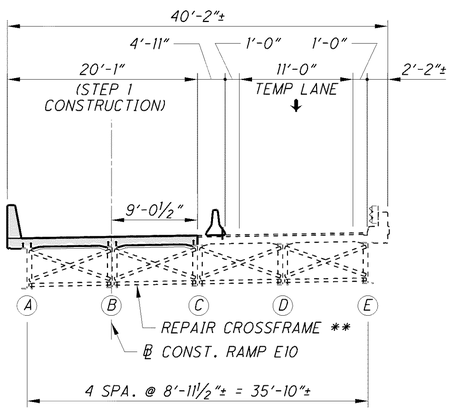

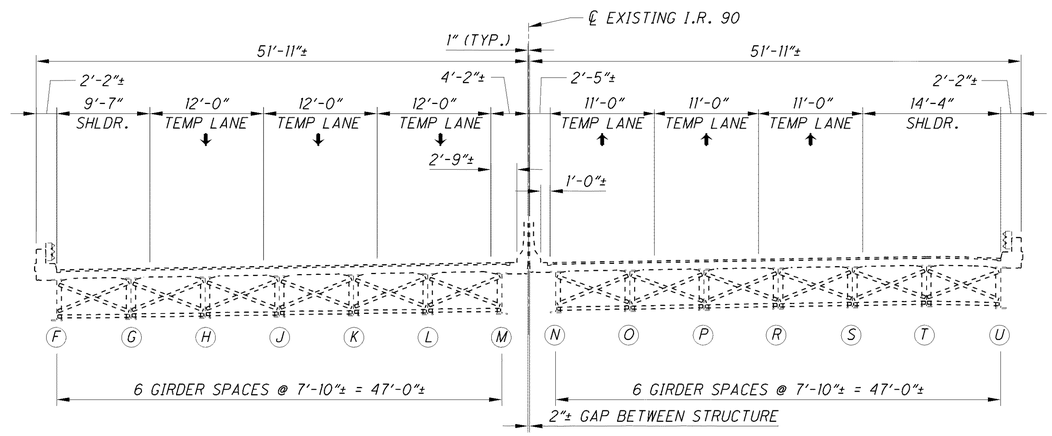

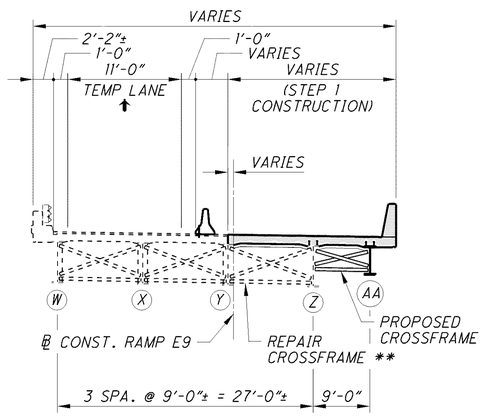

(DIMENSIONS APPLY TO RAMP SECTION ONLY)

PHASE 1, STEP 1 CONSTRUCTION

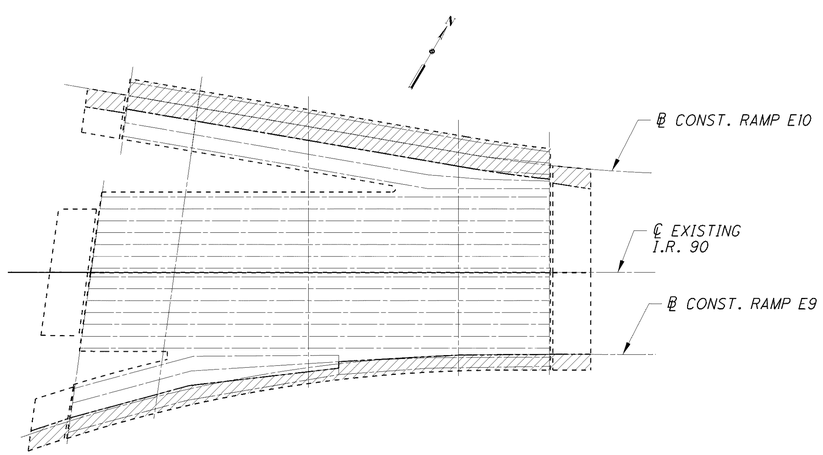

PHASE 1, STEP 1 REMOVAL

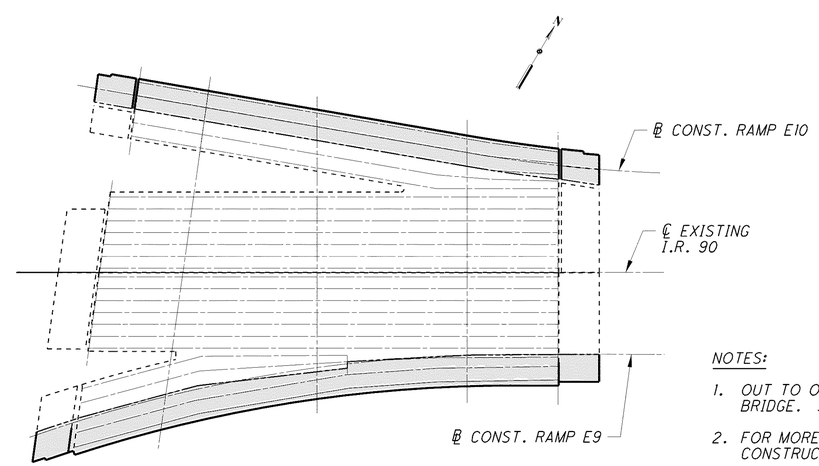

PHASE 1, STEP 1 CONSTRUCTION

* NUMBER OF PARTIAL DEPTH ANCHOR BOLTS PER SEGMENT (INCLUDES PCB-91 ON APPROACH SLABS)

** SPANS 2 AND 3 ONLY (CROSSFRAMES)

LEGEND:

INDICATES AREA TO BE REMOVED PER ITEM 202, PORTIONS OF STRUCTURE REMOVED, OVER 20 FOOT SPAN, AS PER PLAN.

INDICATES AREA TO BE CONSTRUCTED.

NOTES:

1. OUT TO OUT BRIDGE DIMENSION VARY THROUGHOUT LENGTH OF THE BRIDGE. SEE SLAB PLAN SHEET 25/38 FOR MORE DETAILS.
2. FOR MORE DETAILS REGARDING MAINTENANCE OF TRAFFIC AND PHASE CONSTRUCTION, SEE SHEETS 8/38 THRU 11/38.
3. FOR MORE CROSSFRAME REPLACEMENT DETAIL, SEE FRAMING PLAN SHEET 20/38.
4. FOR SUGGESTED CONSTRUCTION SEQUENCE, SEE SHEET 6/38.
5. TOP FLANGE OF GIRDER 'A' DAMAGED DURING DECK REMOVAL, HEAT STRAIGHTENING PERFORMED IN ACCORDANCE WITH SUPPLEMENTAL SPECIFICATION 849 USED TO REPAIR GIRDER 'A'.

NO.	REVISIONS	DATE
	RECORD DRAWINGS	08-09-13

DESIGN AGENCY: WALSH CONSTRUCTION HNTB

CLEVELAND'S INNERBELT BRIDGE 90 — OHIO DEPARTMENT OF TRANSPORTATION

BRIDGE 10
BRIDGE 11
BRIDGE 12

PHASE CONSTRUCTION DETAILS - 2

BRIDGE NO. CUY-77-1597 L AND CUY-90-1651 L/R
I-90 EB, I-90WB AND I-77SB RAMP OVER E 14TH STREET

DESIGNED	DRAWN	REVIEWED	DATE
RSB	RSB	JOL	03-11-11
CHECKED	CHECKED	STRUCTURE FILE NUMBER	
NJ	NJ	1807919/1807900/1807803	

CUY-90-14.90
PID No. 77332/85531

7/38

090_1651LPC002.dgn 1/8/2016 11:31:06 AM rstriegel

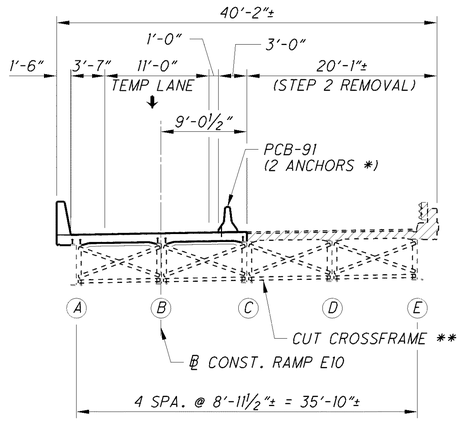

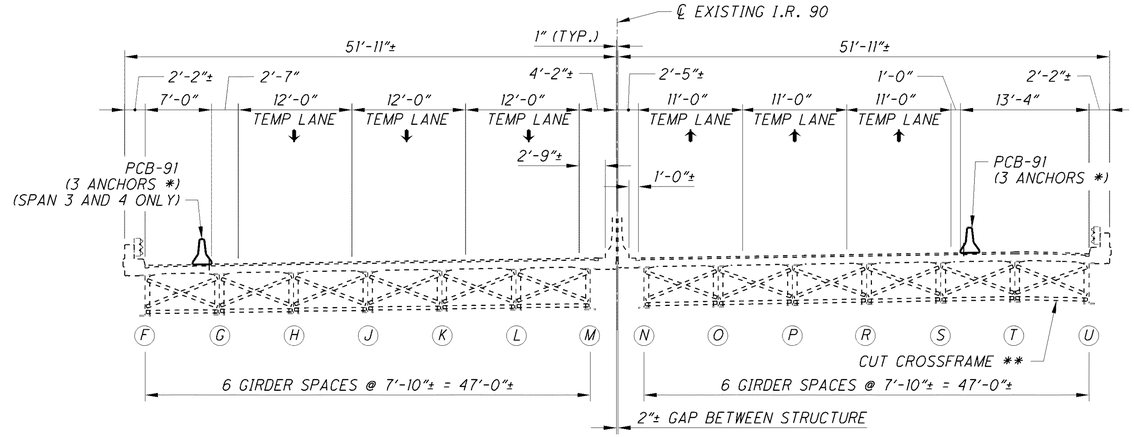

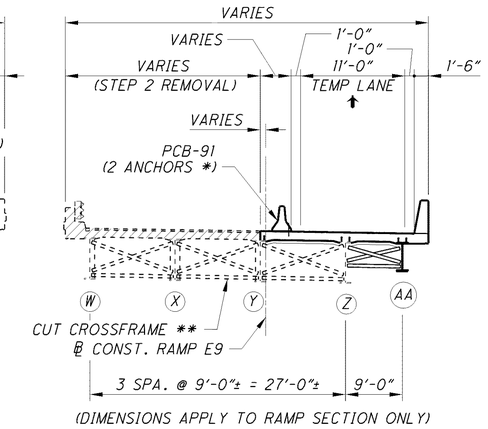

PHASE 1, STEP 2 REMOVAL

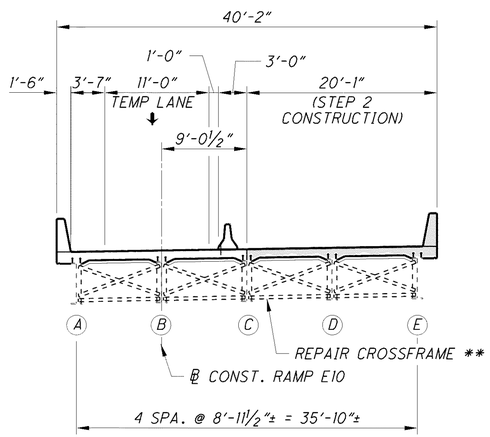

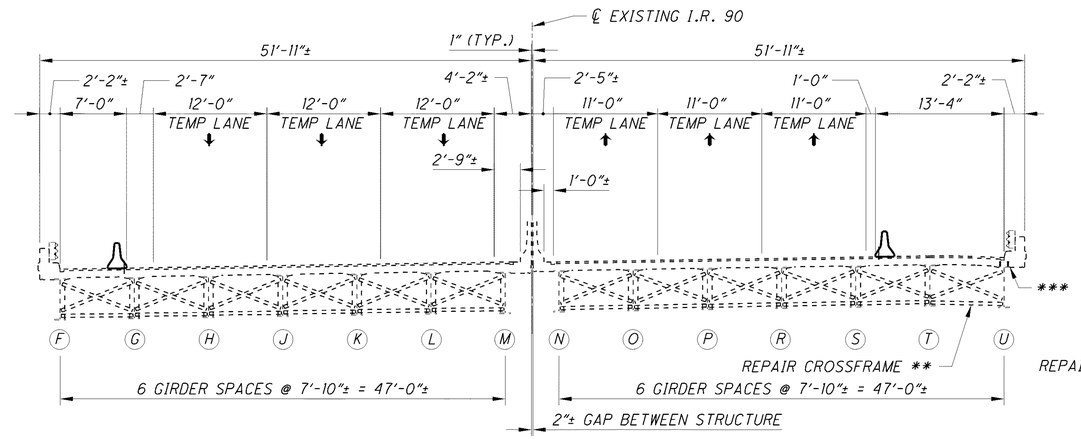

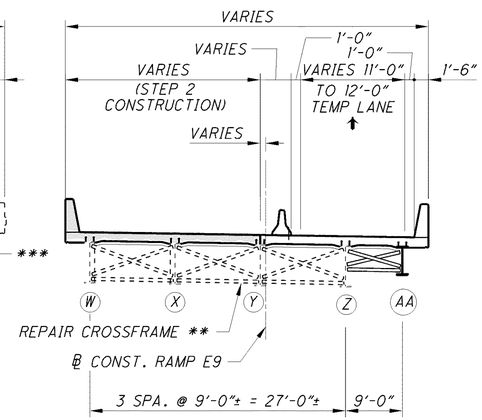

PHASE 1, STEP 2 CONSTRUCTION

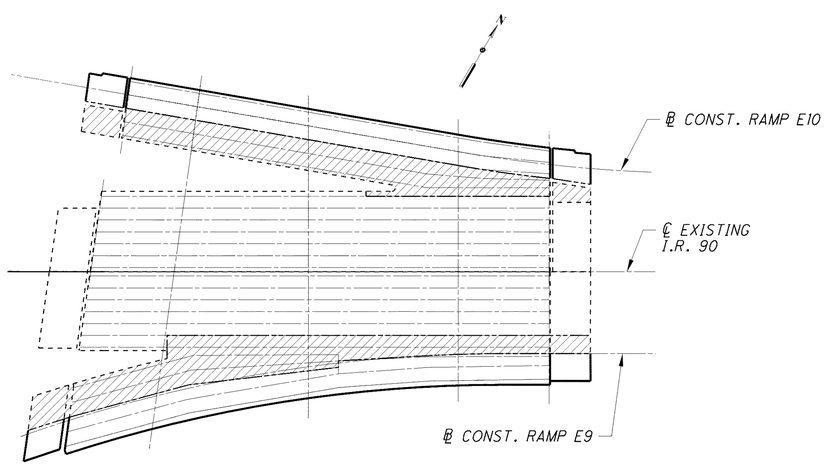

PHASE 1, STEP 2 REMOVAL

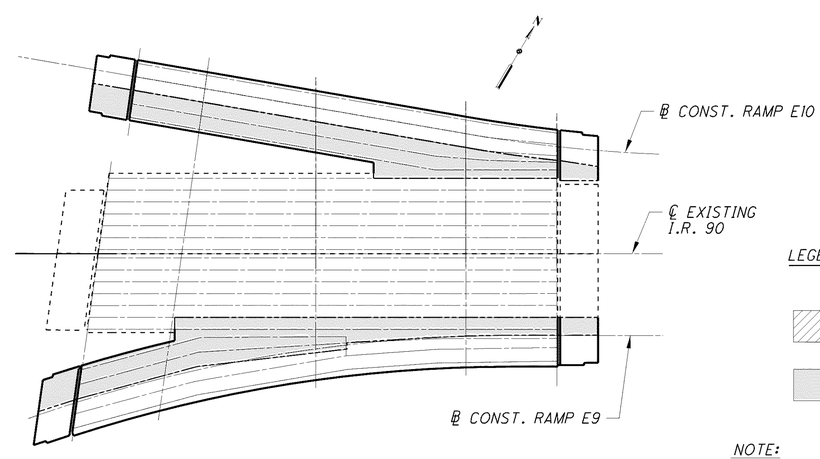

PHASE 1, STEP 2 CONSTRUCTION

* NUMBER OF PARTIAL DEPTH ANCHOR BOLTS PER SEGMENT (INCLUDES PCB-91 ON APPROACH SLABS)

** SPANS 2 AND 3 ONLY (CROSSFRAMES)

*** WITHIN REMOVAL LIMITS (SHEAR CONNECTORS)

LEGEND:

INDICATES AREA TO BE REMOVED PER ITEM 202, PORTIONS OF STRUCTURE REMOVED, OVER 20 FOOT SPAN, AS PER PLAN.

INDICATES AREA TO BE CONSTRUCTED.

NOTE:

1. FOR ADDITIONAL NOTES, SEE SHEET 7/38.
2. AFTER REMOVAL OF THE PORTABLE CONCRETE BARRIER FROM THE NEW DECK, REMOVE THE PARTIAL DEPTH ANCHORS AND GROUT ANY VOIDS LEFT IN THE NEW DECK.

NO.	REVISIONS	DATE
	RECORD DRAWINGS	03-14-11

DESIGN AGENCY: WALSH HNTB

CLEVELAND'S INNERBELT BRIDGE — OHIO DEPARTMENT OF TRANSPORTATION

BRIDGE 10
BRIDGE 11
BRIDGE 12

PHASE CONSTRUCTION DETAILS - 3

BRIDGE NO. CUY-77-1597 L AND CUY-90-1651 L/R
I-90 EB, I-90WB AND I-77SB RAMP OVER E 14TH STREET

DESIGNED	DRAWN	REVIEWED	DATE
RSB	RSB	JOL	03-11-11
CHECKED	CHECKED	STRUCTURE FILE NUMBER	
NJ	NJ	1807919/1807900/1807803	

CUY-90-14.90
PID No. 77332/85531

8/38

090_1651LPC003.dgn 1/8/2016 11:31:14 AM rstriegel

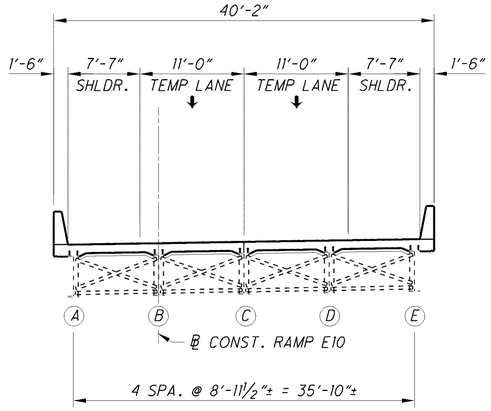

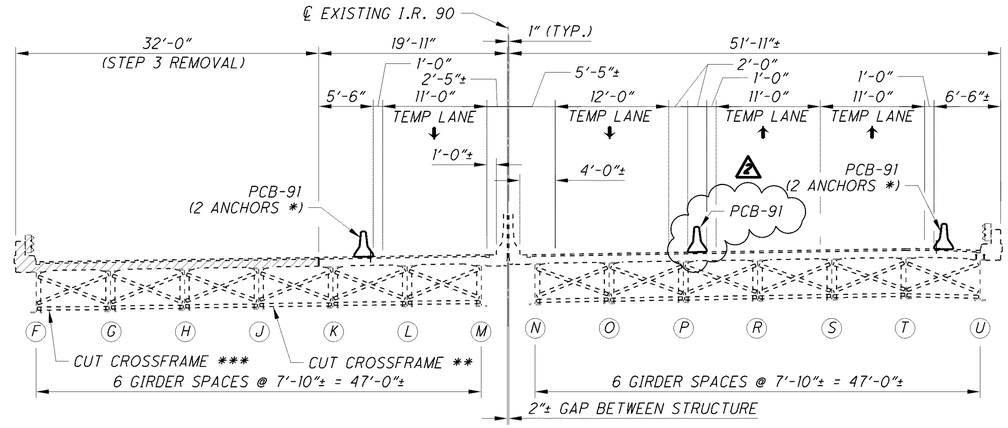

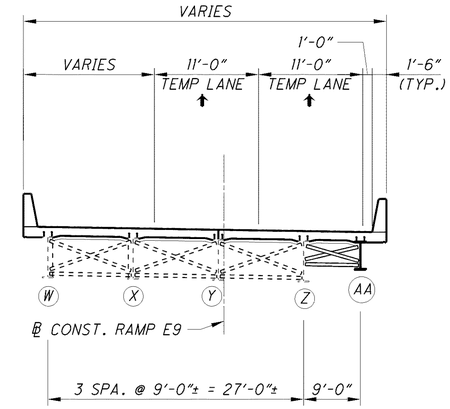

(DIMENSIONS APPLY TO RAMP SECTION ONLY)

PHASE 1, STEP 3 REMOVAL

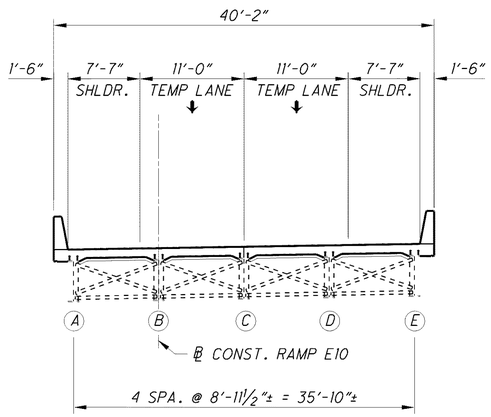

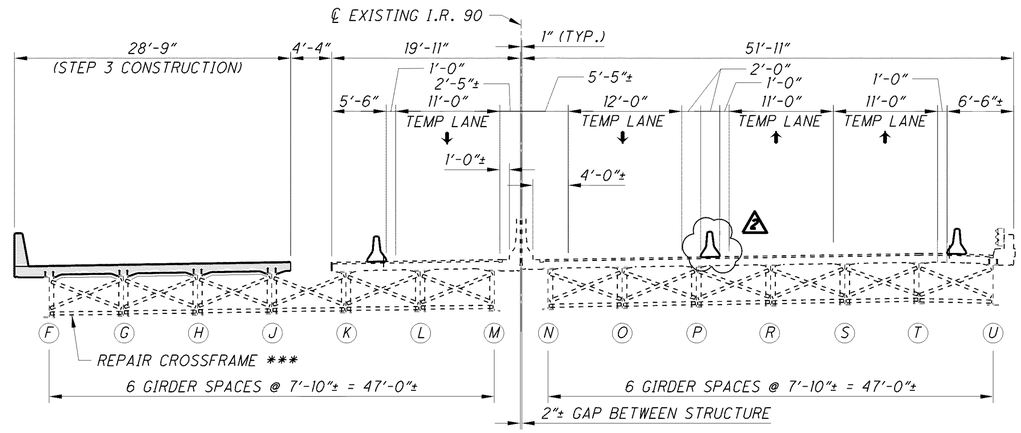

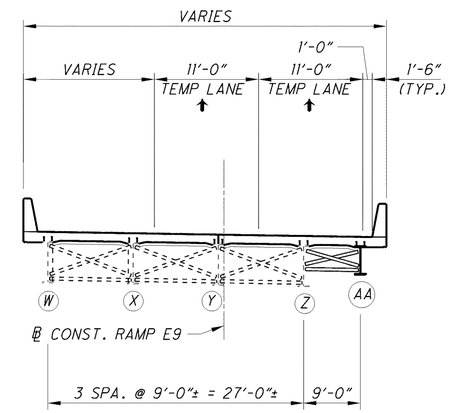

(DIMENSIONS APPLY TO RAMP SECTION ONLY)

PHASE 1, STEP 3 CONSTRUCTION

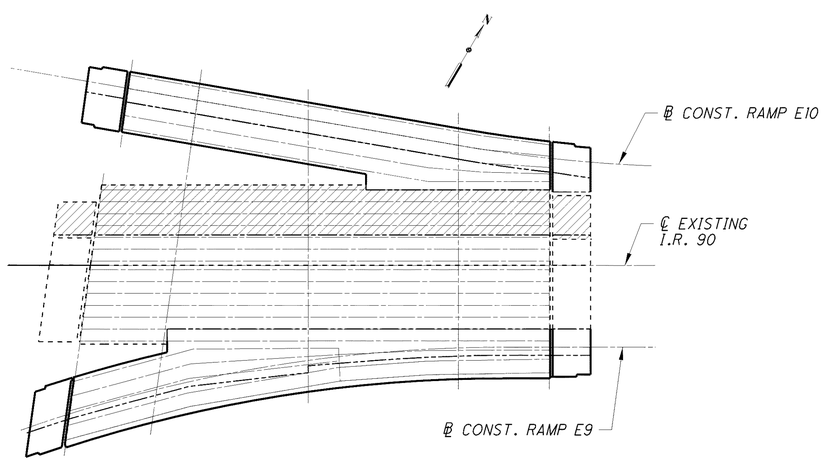

PHASE 1, STEP 3 REMOVAL

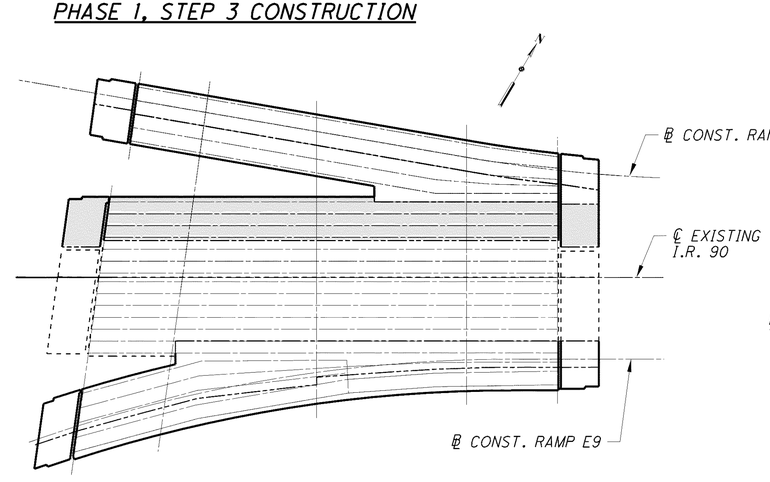

PHASE 1, STEP 3 CONSTRUCTION

* NUMBER OF PARTIAL DEPTH ANCHOR BOLTS PER SEGMENT (INCLUDES PCB-91 ON APPROACH SLABS)

** SPANS 2 AND 3 ONLY (CROSSFRAMES)

*** PORTIONS OF SPAN 3 ONLY (SHEAR CONNECTORS)

LEGEND:

INDICATES AREA TO BE REMOVED PER ITEM 202, PORTIONS OF STRUCTURE REMOVED, OVER 20 FOOT SPAN, AS PER PLAN.

INDICATES AREA TO BE CONSTRUCTED.

NOTE:

1. FOR ADDITIONAL NOTES, SEE SHEET 7/38.

NO.	REVISIONS	DATE
	RECORD DRAWINGS	01-29-13

DESIGN AGENCY: WALSH HNTB (WALSH CONSTRUCTION)

CLEVELAND'S INNERBELT BRIDGE — STATE OF OHIO DEPARTMENT OF TRANSPORTATION

BRIDGE 10
BRIDGE 11
BRIDGE 12

PHASE CONSTRUCTION DETAILS - 4

BRIDGE NO. CUY-77-1597 L AND CUY-90-1651 L/R
I-90 EB, I-90WB AND I-77SB RAMP OVER E 14TH STREET

DESIGNED	DRAWN	REVIEWED	DATE
RSB	RSB	JOL	03-11-11
CHECKED	CHECKED	STRUCTURE FILE NUMBER	
NJ	NJ	1807919/1807900/1807803	

CUY-90-14.90
PID No. 77332/85531

9/38

090_1651LPC004.dgn 1/8/2016 11:31:22 AM rstriegel

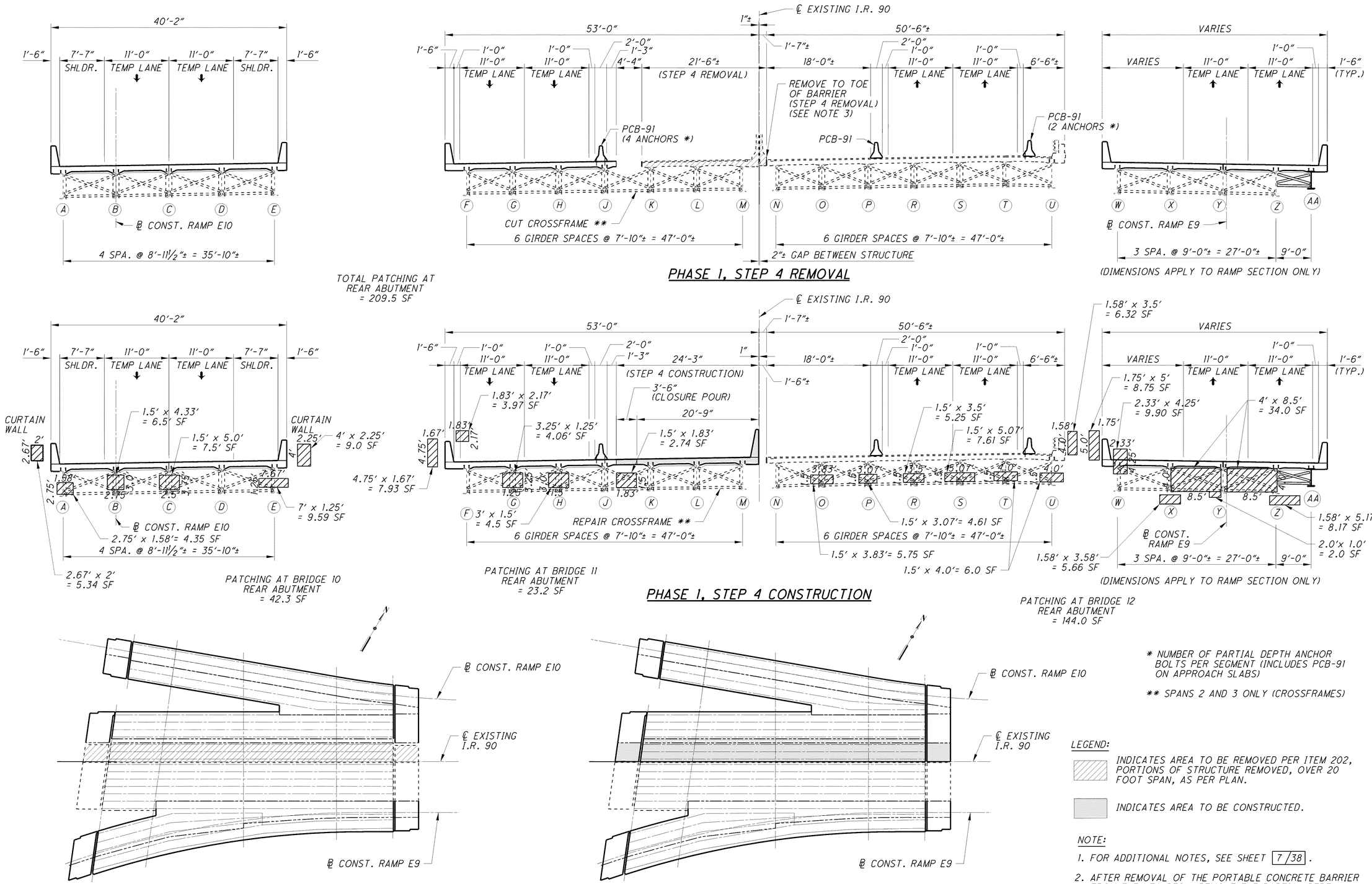

* NUMBER OF PARTIAL DEPTH ANCHOR BOLTS PER SEGMENT (INCLUDES PCB-91 ON APPROACH SLABS)

** SPANS 2 AND 3 ONLY (CROSSFRAMES)

LEGEND:

INDICATES AREA TO BE REMOVED PER ITEM 202, PORTIONS OF STRUCTURE REMOVED, OVER 20 FOOT SPAN, AS PER PLAN.

INDICATES AREA TO BE CONSTRUCTED.

NOTE:

1. FOR ADDITIONAL NOTES, SEE SHEET 7/38.
2. AFTER REMOVAL OF THE PORTABLE CONCRETE BARRIER FROM THE NEW DECK, REMOVE THE PARTIAL DEPTH ANCHORS AND GROUT ANY VOIDS LEFT IN THE NEW DECK.
3. VERIFY LOCATION OF GIRDER FLANGE PRIOR TO SAWCUT OF EXISTING DECK.

NO.	REVISIONS	DATE
	RECORD DRAWINGS	01-29-13

DESIGN AGENCY: WALSH CONSTRUCTION HNTB

BRIDGE 10
BRIDGE 11
BRIDGE 12

PHASE CONSTRUCTION DETAILS - 5 - (REAR ABUTMENT)

BRIDGE NO. CUY-77-1597 L AND CUY-90-1651 L/R
I-90 EB, I-90WB AND I-77SB RAMP OVER E 14TH STREET

DESIGNED	DRAWN	REVIEWED	DATE
RSB	RSB	JOL	03-11-11
CHECKED	CHECKED	STRUCTURE FILE NUMBER	
NJ	NJ	1807919/1807900/1807803	

CUY-90-14.90
PID No. 77332/85531

10/38

090_1651LPC005.dgn 1/8/2016 11:31:32 AM rstriegel

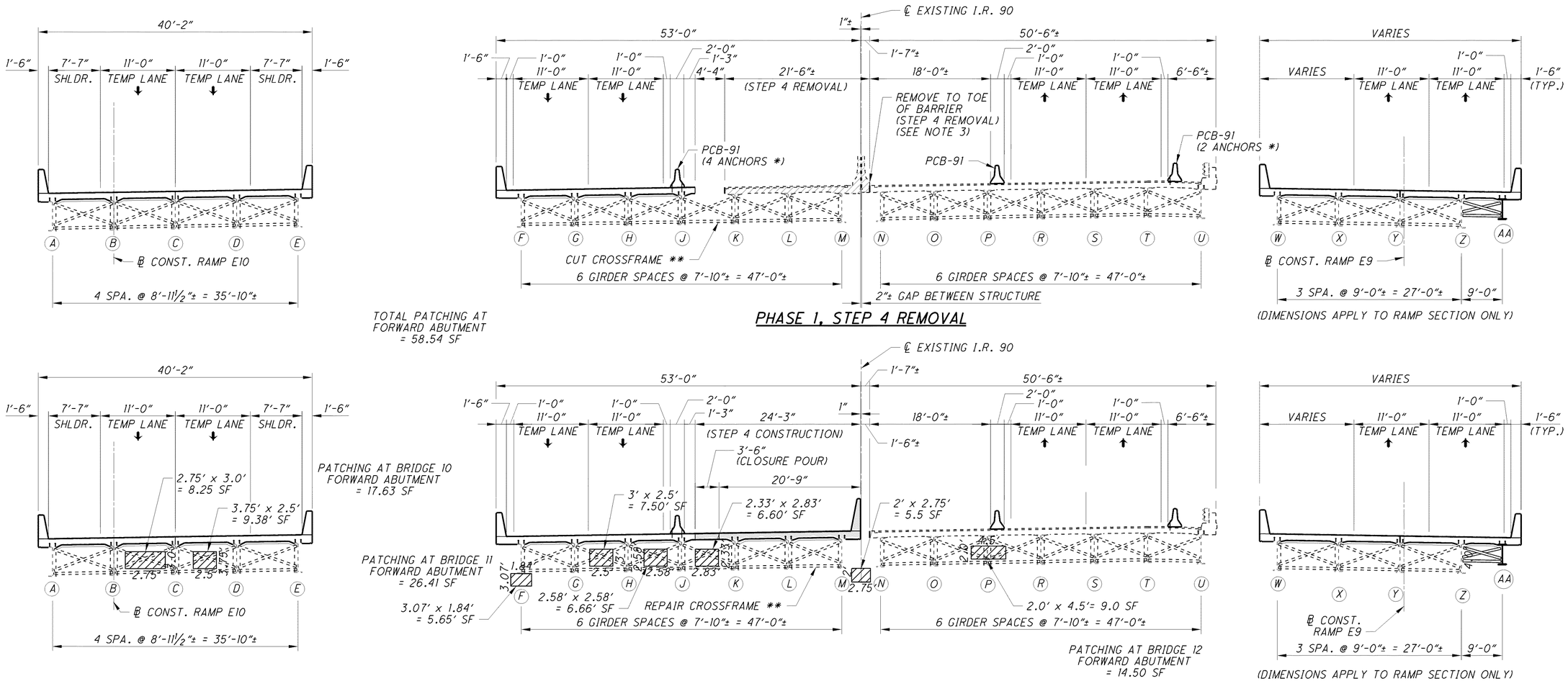

PHASE 1, STEP 4 REMOVAL

TOTAL PATCHING AT FORWARD ABUTMENT = 58.54 SF

PHASE 1, STEP 4 CONSTRUCTION

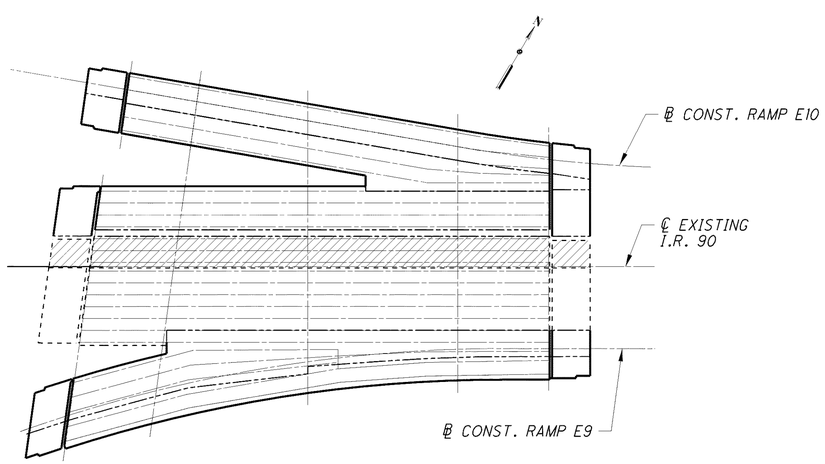

PHASE 1, STEP 4 REMOVAL

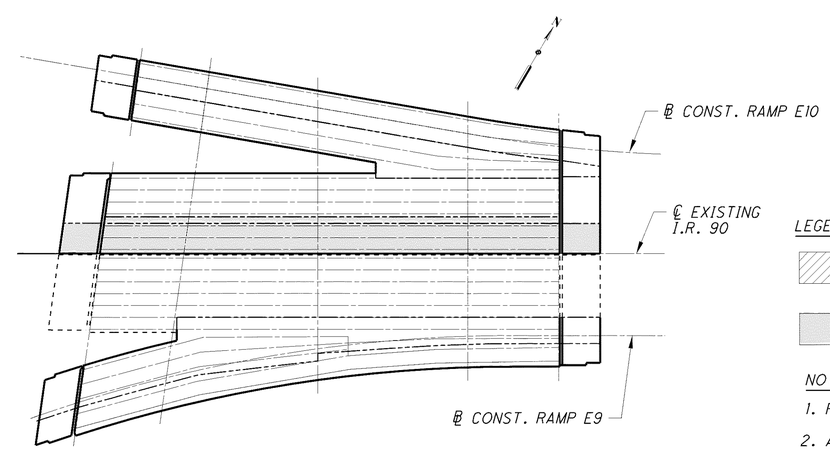

PHASE 1, STEP 4 CONSTRUCTION

* NUMBER OF PARTIAL DEPTH ANCHOR BOLTS PER SEGMENT (INCLUDES PCB-91 ON APPROACH SLABS)

** SPANS 2 AND 3 ONLY (CROSSFRAMES)

LEGEND:

INDICATES AREA TO BE REMOVED PER ITEM 202, PORTIONS OF STRUCTURE REMOVED, OVER 20 FOOT SPAN, AS PER PLAN.

INDICATES AREA TO BE CONSTRUCTED.

NOTE:

1. FOR ADDITIONAL NOTES, SEE SHEET 7/38.
2. AFTER REMOVAL OF THE PORTABLE CONCRETE BARRIER FROM THE NEW DECK, REMOVE THE PARTIAL DEPTH ANCHORS AND GROUT ANY VOIDS LEFT IN THE NEW DECK.
3. VERIFY LOCATION OF GIRDER FLANGE PRIOR TO SAWCUT OF EXISTING DECK.

NO.	REVISIONS	DATE
	RECORD DRAWINGS	01-29-13

DESIGN AGENCY: WALSH HNTB (WALSH CONSTRUCTION)

CLEVELAND'S INNERBELT BRIDGE

OHIO DEPARTMENT OF TRANSPORTATION

BRIDGE 10
BRIDGE 11
BRIDGE 12

PHASE CONSTRUCTION DETAILS - 5 - (FORWARD ABUTMENT)

BRIDGE NO. CUY-77-1597 L AND CUY-90-1651 L/R
I-90 EB, I-90WB AND I-77SB RAMP OVER E 14TH STREET

DESIGNED	DRAWN	CHECKED	REVIEWED	DATE
RSB	RSB	NJ	JOL	03-11-11
CHECKED			STRUCTURE FILE NUMBER	
NJ			1807919/1807900/1807803	

CUY-90-14.90
PID No. 77332/85531

10A / 38

090_1651LPC006.dgn 1/8/2016 11:31:44 AM rstriegel

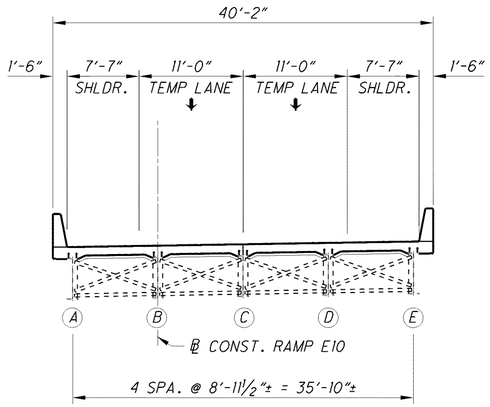

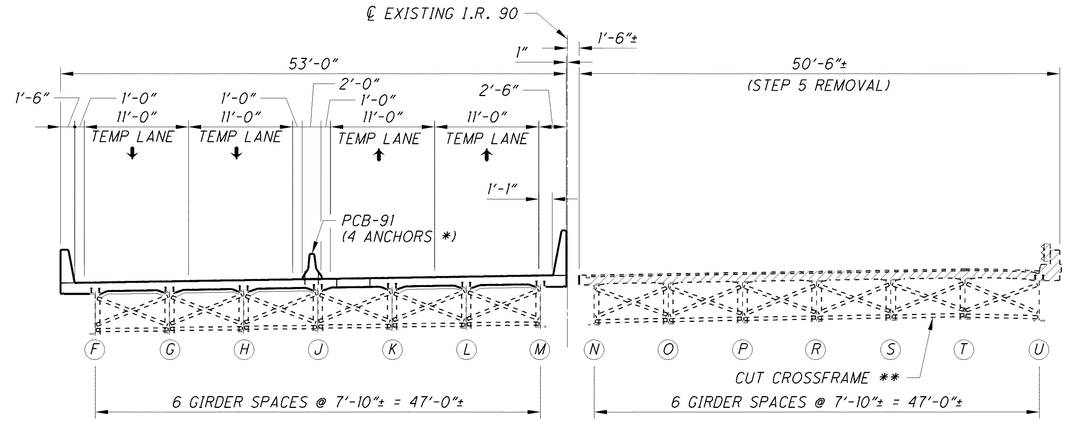

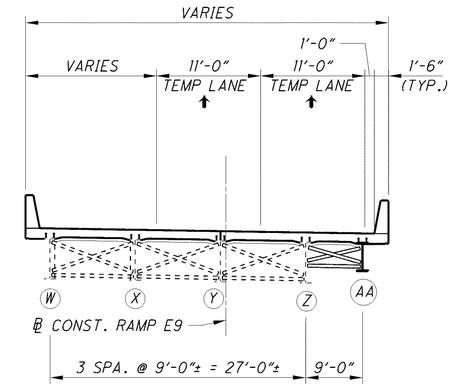

(DIMENSIONS APPLY TO RAMP SECTION ONLY)

PHASE 1, STEP 5 REMOVAL

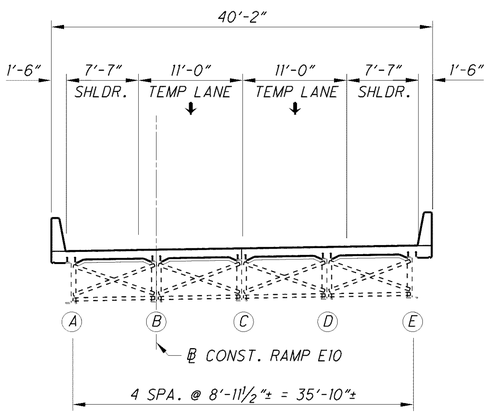

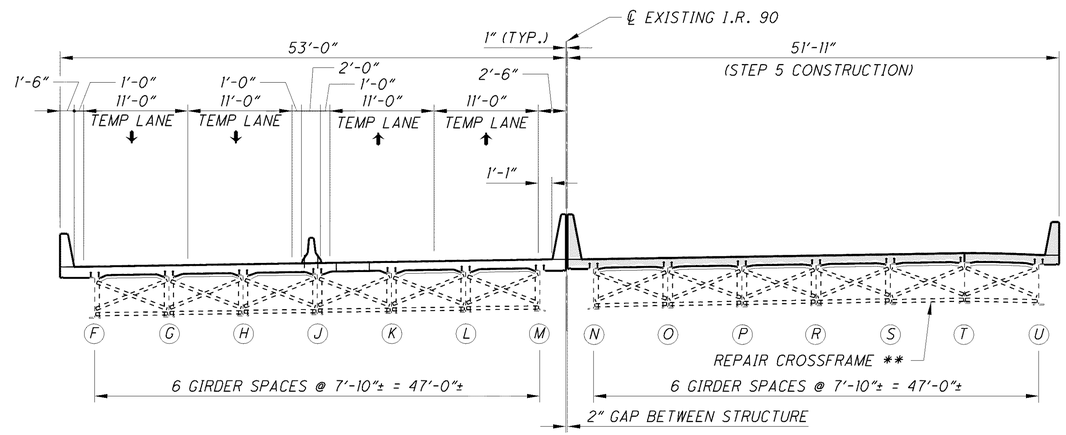

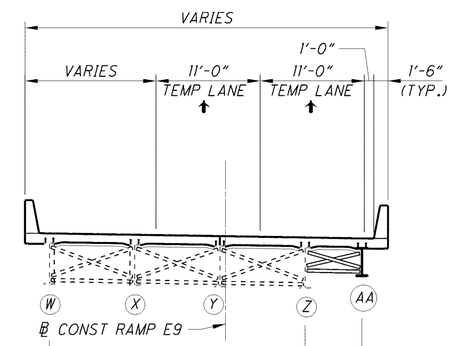

(DIMENSIONS APPLY TO RAMP SECTION ONLY)

PHASE 1, STEP 5 CONSTRUCTION

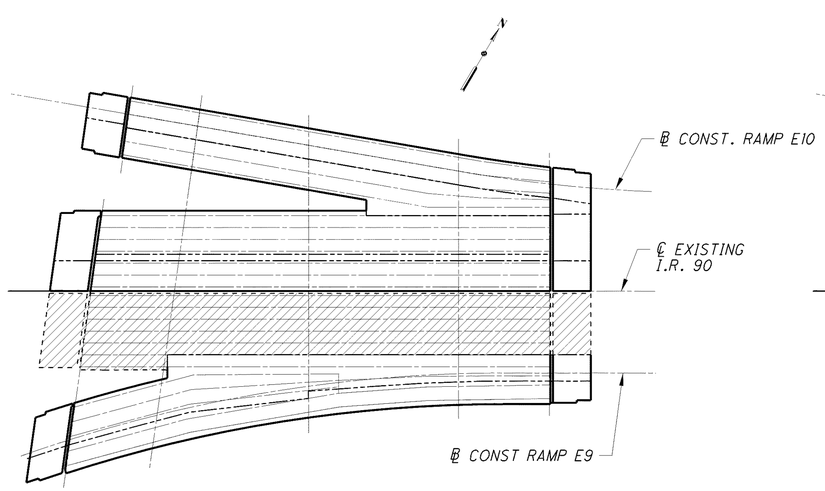

PHASE 1, STEP 5 REMOVAL

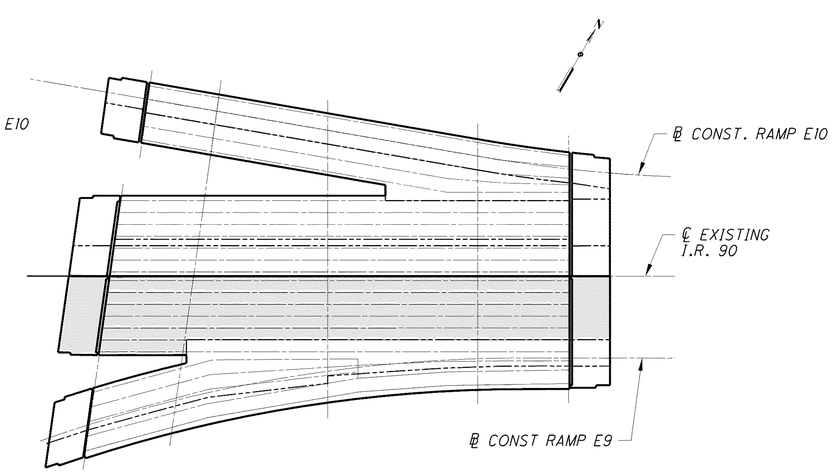

PHASE 1, STEP 5 CONSTRUCTION

* NUMBER OF PARTIAL DEPTH ANCHOR BOLTS PER SEGMENT (INCLUDES PCB-91 ON APPROACH SLABS)

** SPANS 2 AND 3 ONLY (CROSSFRAMES)

LEGEND:

INDICATES AREA TO BE REMOVED PER ITEM 202, PORTIONS OF STRUCTURE REMOVED, OVER 20 FOOT SPAN, AS PER PLAN.

INDICATES AREA TO BE CONSTRUCTED.

NOTE:

1. FOR ADDITIONAL NOTES, SEE SHEET 7/38.
2. AFTER REMOVAL OF THE PORTABLE CONCRETE BARRIER FROM THE NEW DECK, REMOVE THE PARTIAL DEPTH ANCHORS AND GROUT ANY VOIDS LEFT IN THE NEW DECK.

NO.	REVISIONS	DATE
	RECORD DRAWINGS	03-14-11

DESIGN AGENCY: WALSH HNTB (WALSH CONSTRUCTION)

CLEVELAND'S INNERBELT BRIDGES — OHIO DEPARTMENT OF TRANSPORTATION

BRIDGE 10
BRIDGE 11
BRIDGE 12

PHASE CONSTRUCTION DETAILS - 6

BRIDGE NO. CUY-77-1597 L AND CUY-90-1651 L/R
I-90 EB, I-90WB AND I-77SB RAMP OVER E 14TH STREET

DESIGNED	DRAWN	REVIEWED	DATE
RSB	RSB	JOL	03-11-11
CHECKED	CHECKED	STRUCTURE FILE NUMBER	
NJ	NJ	1807919/1807900/1807803	

CUY-90-14.90
PID No. 77332/85531

11/38

090_1651LPC007.dgn 1/8/2016 11:31:50 AM rstriegel

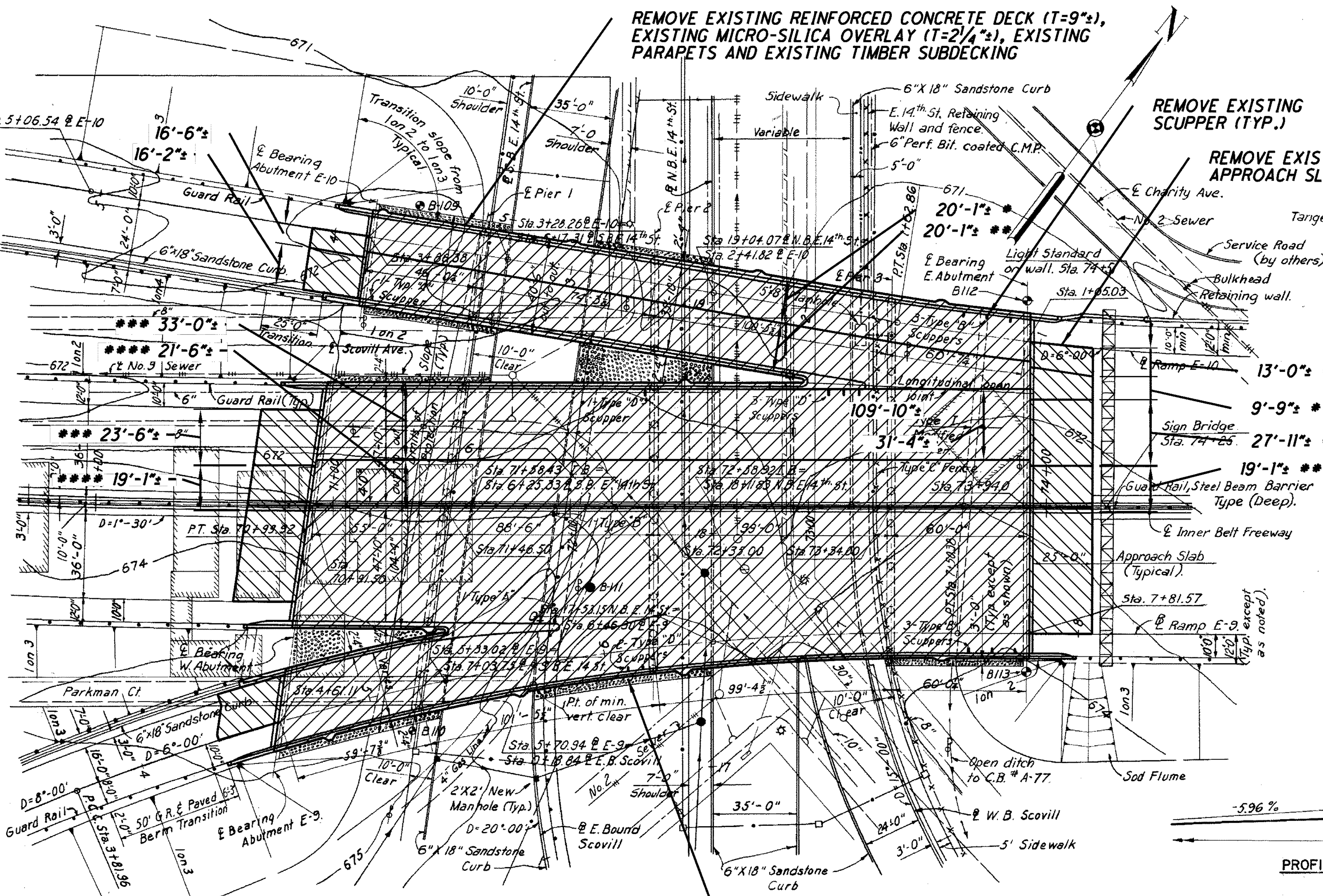

PLAN

WORK FOR BRIDGE CUY-90-1651R IS NOT INCLUDED IN THESE PLANS

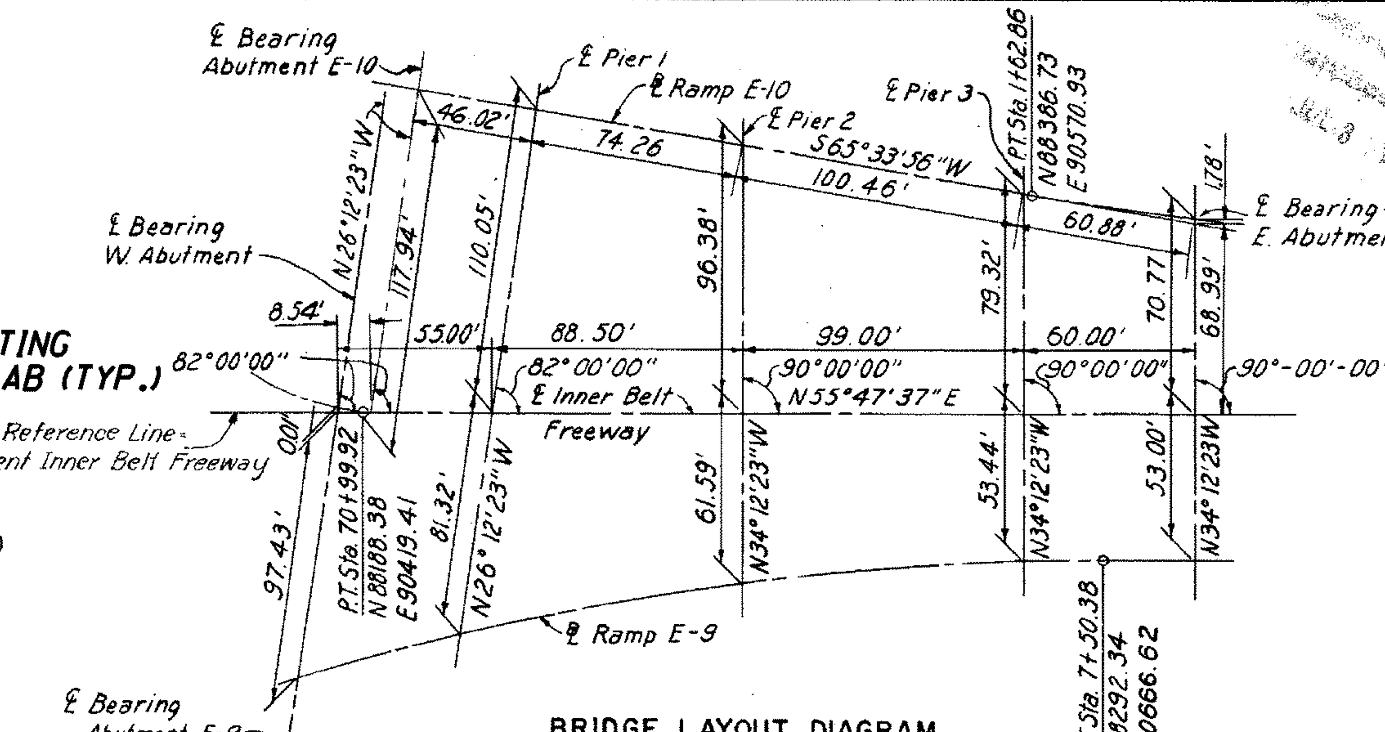

BRIDGE LAYOUT DIAGRAM
No Scale

Blows	Elev.	Material
Elev.	673.0	Brick & Cinder
19	668.0	Brown Silty Sand
24	663.0	Brown Silty Gravelly Sand
41		
18		
21		
40		
93	638.0	Brown Silty Sand
36	633.0	Gray Sandy Silt
34		
21		
39		
20		
26		
34		
27		
45	592.0	Gray Silt

Note: The column at the left indicates the number of blows required to drive the sample spoon 1 ft. They are given at 5' intervals starting at elev. 673.0.

BORING B-111
Vertical scale: 1" = 20'
Sta. 72+07 ℄ Inner Belt 35' Rt.

FED. ROADS DIV. NO. 2 | STATE OHIO | FED. AID PROJ. NO.

CUYAHOGA COUNTY
CITY OF CLEVELAND
CUY-21-15.32
CUY-42-18.42

LEGEND

Right of Way
Telephone Pole
M.E.L.P.
Power Pole
Curb — Face of curb, C.B.
Sewer — M.H.
*Sewer — Inlet, M.H.
*Sewer to be Abandoned
*2" ϕ Duct — Pull Box
*4" ϕ Duct — Fire hydrant
Water
Gas
W.W.L.
Light Pole — Light Pole
* Built under previous contract.

CURVE DATA I.B. FREEWAY	CURVE DATA RAMP E-9	CURVE DATA RAMP E-10
Δ = 12°01'26	Δ = 22°06'19"	Δ = 9°46'18"
D = 1°30'	D = 6°00	D = 6°00'
R = 3819.72'	R = 954.93'	R = 954.93'
T = 402.27'	T = 186.53'	T = 81.63'
L = 801.59'	L = 368.42'	L = 162.86'

CURVE DATA W.B. SCOVILL	CURVE DATA E.B. SCOVILL
Δ = 47°06'56"	Δ = 66°00'11"
D = 15°00'	D = 20°00'
R = 381.97'	R = 286.48'
T = 166.55'	T = 186.05'
L = 314.10'	L = 330.02'

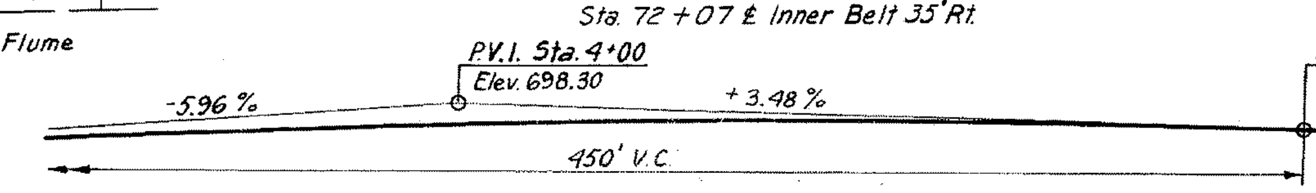

PROFILE - RAMP E-10

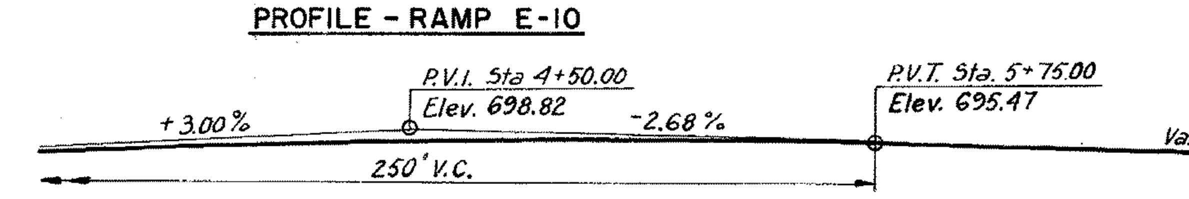

PROFILE - RAMP E-9

NOTES:

The following items are not included in the Bridge Plans: (See Roadway Plans for Details)
Approach grading, pavement and slabs.
Roadway Guard Rail, Sod Flumes.
For details of pier plans & drain pipe locations at piers see sheets 135-7A, 172-7A & 174-7A
For details of slope protection, see Sh. 174.-7A
Rod sounding only were taken at location B-109, B-110, B-112, & B-113. The core drilling made at B-111 is plotted.

Pile lengths are based on boring data and are approximate only. The Contractor shall assume full responsibility for length of piling selected for driving.
For details of slope protection behind Pier 3, see sheet 120.-7A
For details of Sign Bridge, see sheets 177A-7A, 177B-7A

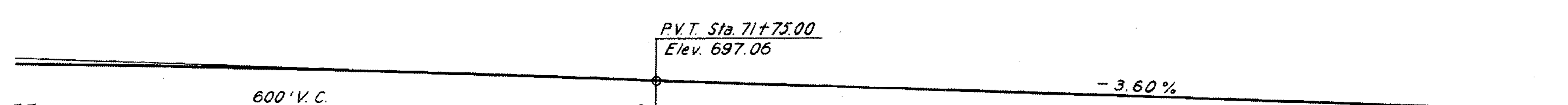

PROFILE - INNER BELT FREEWAY

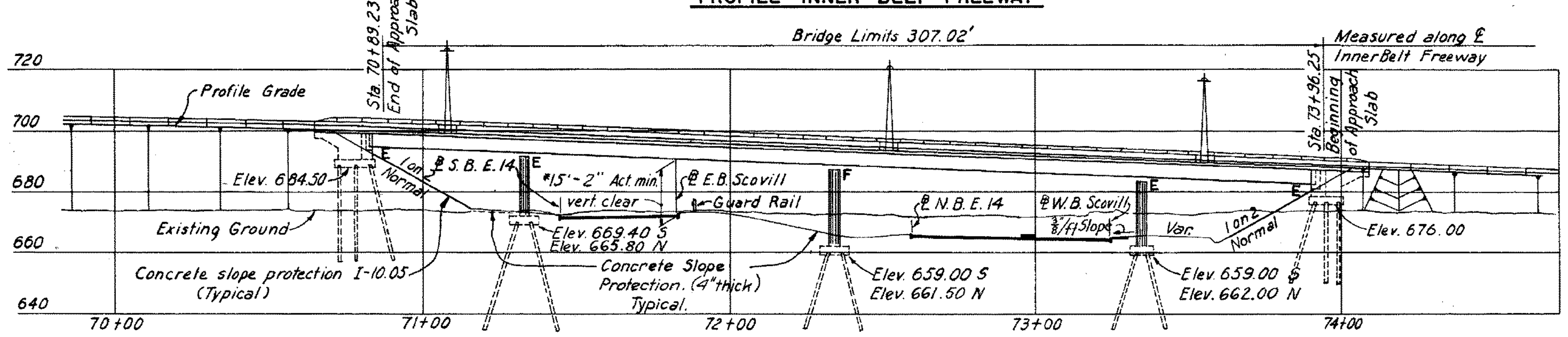

ELEVATION

*15'-0" Required minimum vertical clearance
Point of actual minimum vertical clearance occurs at South beam of Ramp E-9 and East gutter of E.B. Scovill.

PILE INFORMATION			
Location	Diameter	Number	Estimated ave. length
Abutment E-9	12"	17	23'
Abutment E-10	12"	20	23'
W. Abutment	12"	42	28'
E. Abutment	12"	74	28'
Retaining wall	12"	92	27'
Pier 1	14"	48	28'
Pier 2	14"	80	26'
Pier 3	14"	56	27'
E. 14th St. Retain. wall	12"	39	29'

All piles to be C.I.P. Reinforced Concrete.

Note
Piers for Br. No. 4 and E. 14th St. Retaining Walls, are included in Part 6.

PROPOSED STRUCTURE

TYPE: Continuous welded steel girder with reinforced concrete deck and substructure.
SPANS: 55'-0", 88'-6", 99'-0", & 60'-0" along ℄ I.B.
ROADWAY: Varies
LOADING: CF-2000 - Adequate for A.A.S.H.O. alternate loading.
SKEW: Varies
SURFACE COURSE: 1" Monolithic Concrete
ALIGNMENT: 1°30' Lt. Tangent
APPROACH SLABS: AS-1-54 (25' long)
SUPERELEVATION: Varies

H.N.T.B. BR. NO. 4 PART 7A

HOWARD, NEEDLES, TAMMEN & BERGENDOFF
CONSULTING ENGINEERS
KANSAS CITY CLEVELAND NEW YORK

SITE PLAN
INNER BELT FREEWAY OVER EAST 14th ST.
BR. NO. CUY-42-1854 STA. 70+89.23
Scale: 1" = 30' STA. 73+96.25
WILLOW-INNER BELT FREEWAY
CLEVELAND CUYAHOGA COUNTY OHIO

DRAWN R.A.	TRACED J.A.G.	CHECKED A.J.S.	REVIEWED J.C.T.	REVISED
DATE 11-4-58	DATE 12-18-58	DATE 10-21-58	DATE 11-13-59	SHEET 114

- INDICATES AREA TO BE REMOVED PER ITEM 202 PORTIONS OF STRUCTURE REMOVED, OVER 20 FOOT SPAN, AS PER PLAN

- INDICATES AREA TO BE REMOVED PER ITEM 202 APPROACH SLAB REMOVED

LEGEND
* - PHASE 1, STEP 1 REMOVAL
** - PHASE 1, STEP 2 REMOVAL
*** - PHASE 1, STEP 3 REMOVAL
**** - PHASE 1, STEP 4 REMOVAL

NOTE:

1. EXISTING ELEVATIONS SHOWN ON THE ORIGINAL BRIDGE PLANS HAVE NOT BEEN ADJUSTED TO THE CURRENT PROJECT SURVEY ELEVATIONS. ELEVATIONS NEED TO BE ADJUSTED TO THE CURRENT PROJECT SURVEY ELEVATOINS. FOR REAR ABUTMENT, PIER1, PIER2, PIER3 AND FORWARD ABUTMENT THE ELEVATION ADJUSTMENT IS APPROXIMATELY 0.94, 0.76, 0.70, 0.66 AND 0.64 FEET LOWER RESPECTIVELY THAN EXISTING ELEVATIONS SHOWN ON THE ORIGINAL BRIDGE PLANS.

NO.	REVISIONS	DATE
	RECORD DRAWINGS	03-14-11

DESIGN AGENCY: WALSH CONSTRUCTION / HNTB

CLEVELAND'S INNERBELTBRIDGE — OHIO DEPARTMENT OF TRANSPORTATION

REMOVAL DETAILS - 1
BRIDGE NO. CUY-77-1597 L AND CUY-90-1651 L
I-90WB AND I-77SB RAMP OVER E 14TH STREET

BRIDGES 10 & 11

DESIGNED RSB | DRAWN JTW | REVIEWED JOL | DATE 03-11-11
CHECKED NJ | CHECKED NJ | STRUCTURE FILE NUMBER 1807919/1807900

CUY-90-14.90
PID No. 77332/85531

12/38

090_1651LRE001.dgn 1/8/2016 11:31:57 AM rstriegel

NOTE:

1. EXISTING ELEVATIONS SHOWN ON THE ORIGINAL BRIDGE PLANS HAVE NOT BEEN ADJUSTED TO THE CURRENT PROJECT SURVEY ELEVATIONS. ELEVATIONS NEED TO BE ADJUSTED TO THE CURRENT PROJECT SURVEY ELEVATOINS. FOR REAR ABUTMENT, PIER1, PIER2, PIER3 AND FORWARD ABUTMENT THE ELEVATION ADJUSTMENT IS APPROXIMATELY 0.94, 0.76, 0.70, 0.66 AND 0.64 FEET LOWER RESPECTIVELY THAN EXISTING ELEVATIONS SHOWN ON THE ORIGINAL BRIDGE PLANS.

- INDICATES AREA TO BE REMOVED PER ITEM 202 PORTIONS OF STRUCTURE REMOVED, OVER 20 FOOT SPAN, AS PER PLAN

2	OHIO		

115 / 181

CUYAHOGA COUNTY
CITY OF CLEVELAND
CUY-21-15.32
CUY-42-18.42

JUL 3 1985

Note: Prefix "AA" shall be assigned to all bar marks.

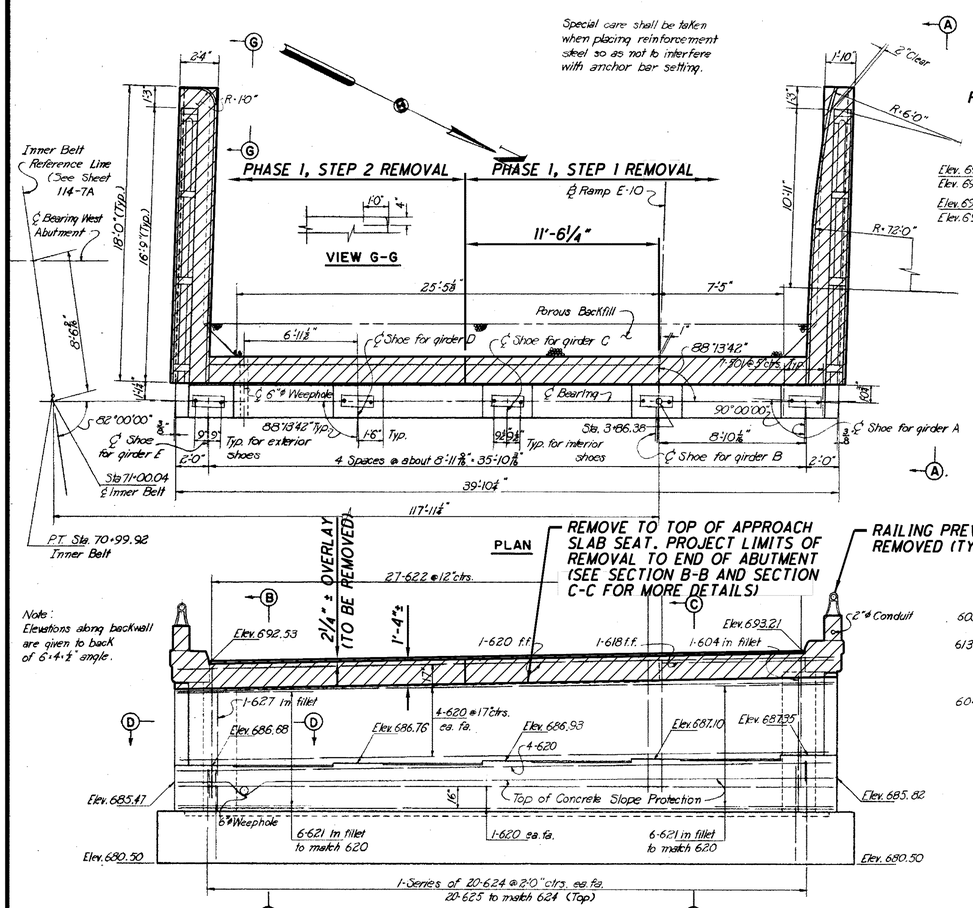

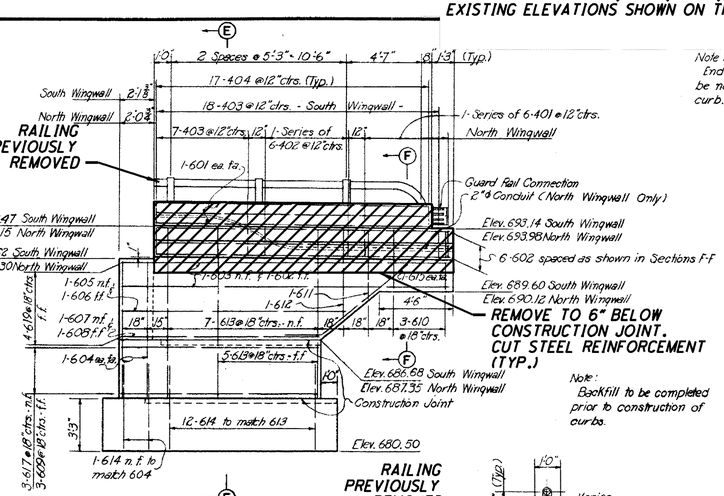

Note: End of railing parapet to be normal to top of safety curb.

Note: Backfill to be completed prior to construction of curbs.

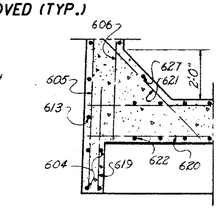

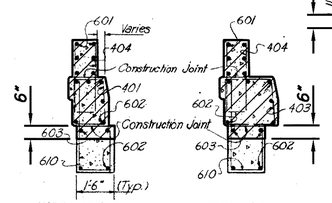

Note: Scale for all Sections is ⅜" = 1'-0"

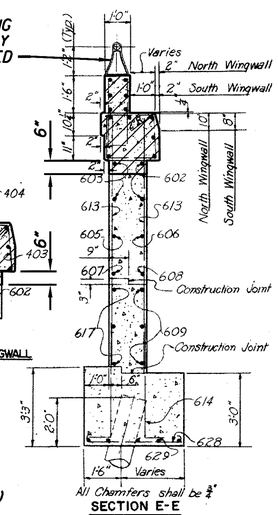

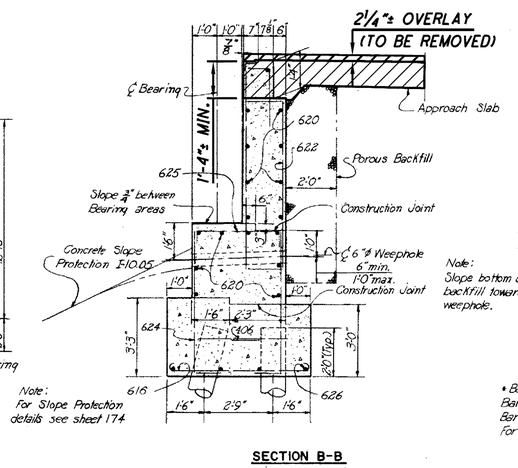

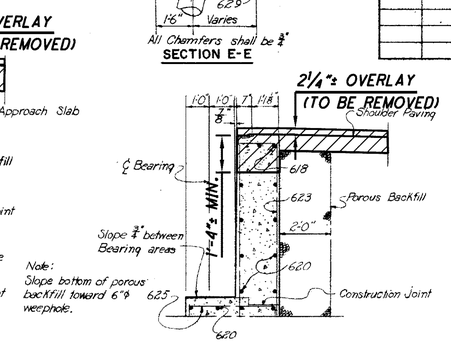

Reinforcement Notes
* Bars are to be included with "Item S-14, Railing" for payment.
Bar dimensions are given out to out.
Bars of a series shall vary in length by a constant increment.
For replacement schedule see sheet 103-7A

REINFORCEMENT SCHEDULE

MARK	NO.	LENGTH	TYPE	DIMENSIONS A	DIMENSIONS B	DIMENSIONS C	DIMENSIONS D	SERIES INCREMENT	WEIGHT
401	1-Ser. of G	4'-6" to 6'-0"	109	8" to 1'-5"	1'-5"			5⅝"	21
402	1-Ser. of G	6'-2" to 6'-6"	109	1'-6" to 1'-8"	1'-5"			⅝"	25
403	25	6'-6"	109	1'-8"	1'-5"				109
404	34	5'-7"	105	8"	2'-7"				127
406	14	6'-10"	144	2'-6"	1'-10"	7"			64
501	35	4'-5"	105	1'-8"	1'-6"				162
601 *	12	16'-3"	Str.						
602	16	17'-6"	Str.						421
603	4	19'-6"	Str.						117
604	9	7'-6"	Str.						101
605	2	13'-6"	Str.						41
606	2	11'-0"	Str.						33
607	2	11'-9"	Str.						35
608	2	9'-9"	Str.						29
609	6	8'-3"	Str.						74
610	6	5'-9"	126	1'-8"	1'-2"	3'-3"			52
611	2	8'-4"	105	1'-2"	3'-9"				25
612	2	10'-10"	105	1'-2"	5'-0"				33
613	24	9'-3"	Str.						333
614	30	6'-4"	104	5'-8"	10"				285
615	4	8'-8"	108	6'-9"	1'-6"	1'-3"			52
616	26	6'-9"	100	5'-5"					264
617	6	13'-4"	104	11'-6"	2'-0"				120
618	1	10'-6"	Str.						16
619	8	4'-0"	Str.						48
620	17	39'-6"	Str.						1009
621	12	6'-0"	Str.						108
622	27	19'-11"	112	10"	7'-8"	6'-4"	0"		808
623	10	18'-7"	109	7'-8"	1'-4"				279
624	2-Ser. of 20	6'-2" to 6'-8"	104	3'-6" to 6'-0"	10"			⅝"	386
625	20	7'-1"	105	3'-5"	2'-0"				212
626	8	21'-9"	Str.						261
627	1	7'-3"	Str.						11
628	2-Ser. of 6	4'-7" to 5'-4"	100	3'-3" to 4'-0"				1¾"	45
629	10	15'-1"	100	13'-9"					226
								Total	5932

NOTES:
All piles shall be 12" C.I.P. reinforced concrete.
All battered piles shall be battered 3 in 12 in the direction shown.
Pile spacings are given along bottom of footing
For details of end dam see sheet 173-7A
For masonry plate detail see sheet 173-7A
Reinforcement bars shall be 3" clear from bottom of footing, 2" elsewhere.
For Reinforcement Bending Diagram see sheet 117-7A
For location of lighting conduit see sheet 176-7A
For guard rail connection and railing details see sheet 175-7A
n.f. = near face; f.f. = far face; ea. fa. = each face;

H.N.T.B. BR. NO. 4 PART 7A

HOWARD, NEEDLES, TAMMEN & BERGENDOFF
CONSULTING ENGINEERS
KANSAS CITY CLEVELAND NEW YORK

ABUTMENT E-10

INNER BELT FREEWAY OVER EAST 14 th ST.

BR. NO. CUY-42-1854 STA. 70+89.23
Scale: 1/4" = 1'-0" STA. 73+96.25
Except as noted

WILLOW-INNER BELT FREEWAY

CLEVELAND CUYAHOGA COUNTY OHIO

DRAWN CAB	TRACED	CHECKED	REVIEWED JCT	REVISED
DATE 1-3-59	DATE	DATE 2-26-59	DATE 11-13-59	SHEET 115

CUY-77-1597L - REAR ABUTMENT

NO.	REVISIONS	DATE
	RECORD DRAWINGS	03-14-11

DESIGN AGENCY: WALSH HNTB (WALSH CONSTRUCTION)

CLEVELAND'S INNERBELT BRIDGES — OHIO DEPARTMENT OF TRANSPORTATION

BRIDGES 10 & 11

REMOVAL DETAILS - 2

BRIDGE NO. CUY-77-1597 L AND CUY-90-1651 L
I-90WB AND I-77SB RAMP OVER E 14TH STREET

DESIGNED	DRAWN	REVIEWED	DATE
RSB	RSB	JOL	03-11-11
CHECKED	CHECKED	STRUCTURE FILE NUMBER	
NJ	NJ	1807919/1807900	

CUY-90-14.90
PID No. 77332/85531

13 / 38

090_1651LRE002.dgn 1/8/2016 11:32:08 AM rstriegel

- INDICATES AREA TO BE REMOVED PER ITEM 202 PORTIONS OF STRUCTURE REMOVED, OVER 20 FOOT SPAN, AS PER PLAN

FED. ROADS DIV. NO.	STATE	FED. AID PROJ. NO.	
2	OHIO		

116 / 181

CUYAHOGA COUNTY
CITY OF CLEVELAND
CUY-21-15.32
CUY-42-18.42

Note: Prefix "AB" shall be assigned to all bar marks.

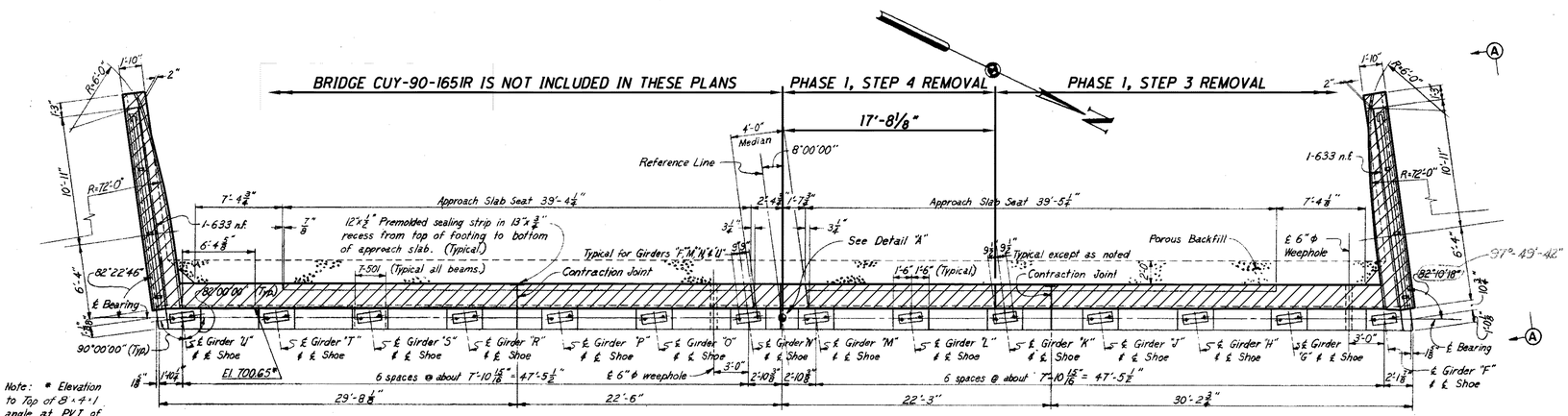

Note: * Elevation to Top of 8 x 4 x 1 angle at P.V.I. of 5'-0" rounding.

PLAN

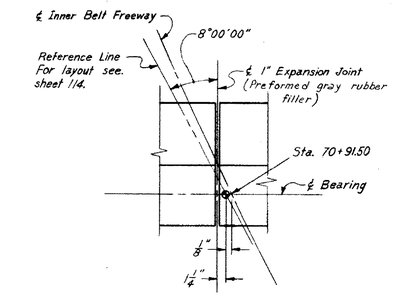

DETAIL "A"
Scale: 1/2" = 1'-0"

REMOVE TO TOP OF APPROACH SLAB SEAT. PROJECT LIMITS OF REMOVAL TO END OF ABUTMENT SEE SECTION B-B AND C-C FOR MORE DETAILS (TYP.)

Note: Elevations given along backwall are given to Top of 8 x 4 x 1 angle.

Note: Top of backwall to follow crown of roadway.

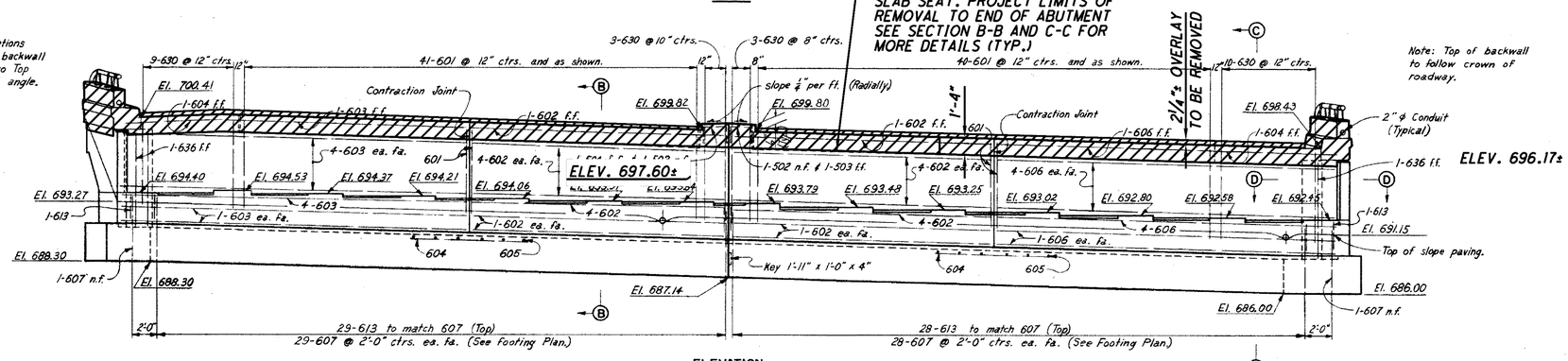

ELEVATION

NOTES:

All piles shall be 12" ϕ Cast-in-Placed reinforced Concrete.
All battered piles shall be battered 3 in 12 in direction shown.
Pile spacings are given along bottom of footing.
For details of end dam, see Sheet 173-7A
For masonry plate details, see Sheet 173-7A
Reinforcement bars shall be 3 inches clear from bottom of footing and 2 inches elsewhere.
For Reinforcement Schedule, see Sheet 117-7A
For Slope Protection details, see Sheet 174-7A
For location of lighting conduit, see Sheet 176-7A
For Railing details and Guard Rail connection details, see Sheet 175-7A
For sections, see Sheet 117-7A
n.f. = near face; f.f. = far face; ea. fa. = each face.

Backfill shall be placed prior to placing of curb.

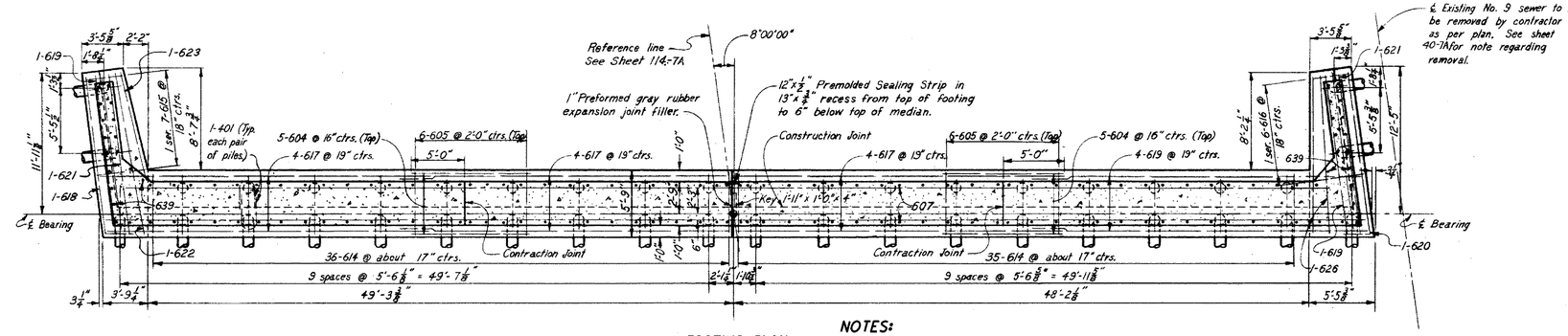

FOOTING PLAN

NOTES:

1. EXISTING ELEVATIONS SHOWN ON THE ORIGINAL BRIDGE PLANS HAVE NOT BEEN ADJUSTED TO THE CURRENT PROJECT SURVEY ELEVATIONS. ELEVATIONS NEED TO BE ADJUSTED TO THE CURRENT PROJECT SURVEY ELEVATOINS. FOR REAR ABUTMENT, PIER1, PIER2, PIER3 AND FORWARD ABUTMENT THE ELEVATION ADJUSTMENT IS APPROXIMATELY 0.94, 0.76, 0.70, 0.66 AND 0.64 FEET LOWER RESPECTIVELY THAN EXISTING ELEVATIONS SHOWN ON THE ORIGINAL BRIDGE PLANS.

2. FOR SECTION B-B AND C-C SEE SHEET 15/38.

H.N.T.B. BR. NO. 4 PART 7A

HOWARD, NEEDLES, TAMMEN & BERGENDOFF
CONSULTING ENGINEERS
KANSAS CITY CLEVELAND NEW YORK

WEST ABUTMENT

INNER BELT FREEWAY OVER EAST 14th ST.

BR. NO. CUY-42-1854 STA. 70+89.23
Scale: 3/16" = 1'-0" Except as noted STA. 73+96.25

WILLOW-INNER BELT FREEWAY
CLEVELAND CUYAHOGA COUNTY OHIO

DRAWN C.M.	TRACED	CHECKED H.R.L.	REVIEWED JCT	REVISED 6-17-60
DATE 1-14-59	DATE	DATE 1-22-59	DATE 1-13-59	SHEET 116

CUY-42-1854 L/R - REAR ABUTMENT

NO.	REVISIONS	DATE
	RECORD DRAWINGS	03-14-11

DESIGN AGENCY: WALSH CONSTRUCTION — HNTB

CLEVELAND'S INNERBELT BRIDGES 90 — OHIO DEPARTMENT OF TRANSPORTATION

BRIDGES 10 & 11

REMOVAL DETAILS - 3

BRIDGE NO. CUY-77-1597 L AND CUY-90-1651 L
I-90WB AND I-77SB RAMP OVER E 14TH STREET

DESIGNED RSB	DRAWN JTW	REVIEWED JOL	DATE 03-11-11
CHECKED NJ	CHECKED NJ	STRUCTURE FILE NUMBER 1807919/1807900	

CUY-90-14.90
PID No. 77332/85531

14/38

14/38

090_1651LRE003.dgn 1/8/2016 11:32:16 AM rstriegel

- INDICATES AREA TO BE REMOVED PER ITEM 202 PORTIONS OF STRUCTURE REMOVED, OVER 20 FOOT SPAN, AS PER PLAN

NOTE:

1. EXISTING ELEVATIONS SHOWN ON THE ORIGINAL BRIDGE PLANS HAVE NOT BEEN ADJUSTED TO THE CURRENT PROJECT SURVEY ELEVATIONS. ELEVATIONS NEED TO BE ADJUSTED TO THE CURRENT PROJECT SURVEY ELEVATOINS. FOR REAR ABUTMENT, PIER1, PIER2, PIER3 AND FORWARD ABUTMENT THE ELEVATION ADJUSTMENT IS APPROXIMATELY 0.94, 0.76, 0.70, 0.66 AND 0.64 FEET LOWER RESPECTIVELY THAN EXISTING ELEVATIONS SHOWN ON THE ORIGINAL BRIDGE PLANS.

FED. ROADS DIV. NO.	STATE	FED. AID PROJ. NO.	
2	OHIO		

117 / 181

CUYAHOGA COUNTY
CITY OF CLEVELAND
CUY-21-1532
CUY-42-1842

Note: Prefix "AB" shall be assigned to all bar marks.

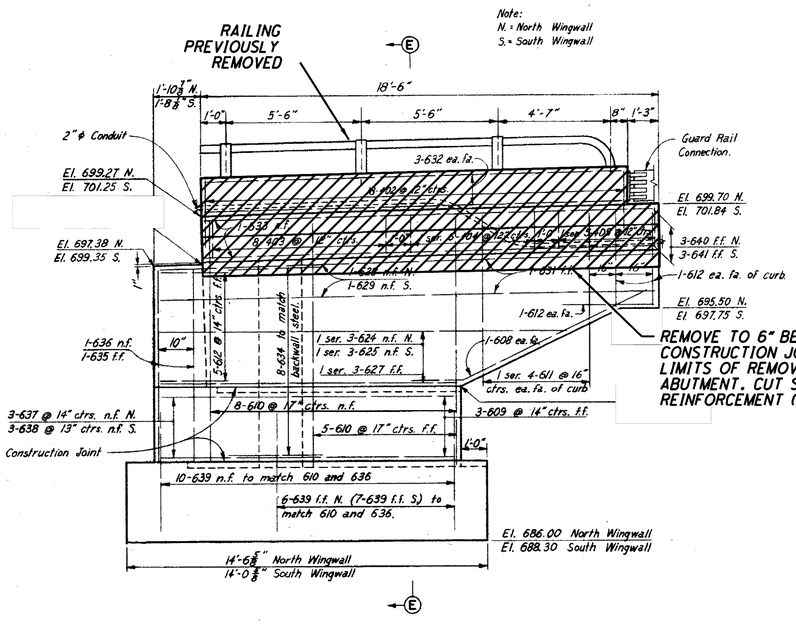

ELEVATION A-A

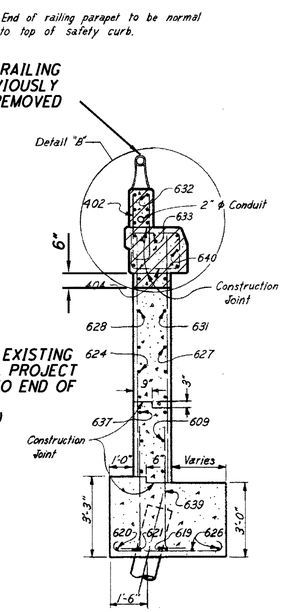

SECTION E-E

Elevation South Wingwall similar except as noted.

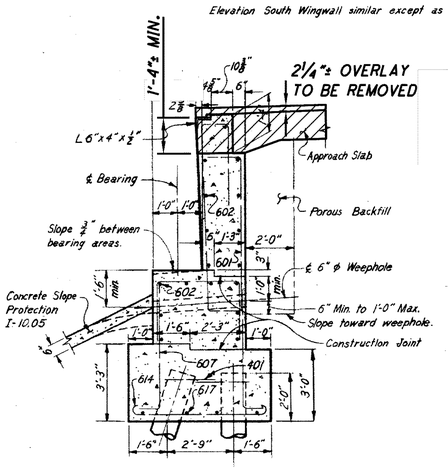

SECTION B-B

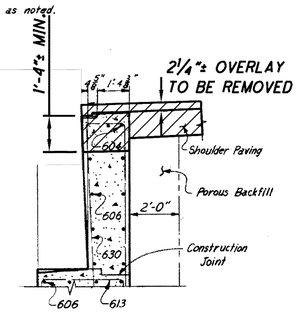

PART SECTION C-C

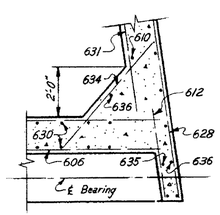

SECTION D-D

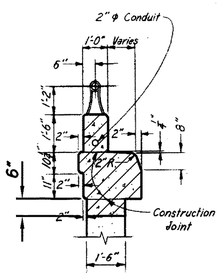

All chamfers to be 3/4".

DETAIL "B"

Note: Sections are typical except for bar marks.

MARK	NO.	LENGTH	TYPE	DIMENSIONS A	B	C	D	SERIES INCREMENT	WEIGHT (LBS)
401	36	5'-10"	144	2'-0"	1'-10"	7"			140
402	36	5'-9"	105	8"	2'-8"				138
403	16	6'-7"	109	1'-8"	1'-5"				70
404	2-series-6	6'-1" to 6'-7"	109	1'-5" to 1'-8"	1'-5"			1 1/16"	51
405	2-series-5	4'-3" to 5'-11"	109	0'-6" to 1'-4"	1'-5"			5"	34
501	98	4'-5"	105	1'-8"	1'-6"				452
502	2	4'-7"	105	1'-8"	1'-7"				10
503	1	4'-4"	105	1'-5"	1'-7"				5
504	1	4'-10"	105	1'-11"	1'-7"				5
601	81	19'-10"	112	1'-1"	7'-6"	6'-2"	2"		2413
602	34	22'-0"	str.						1123
603	17	29'-6"	str.						753
604	12	10'-0"	str.						180
605	12	5'-3"	str.						95
606	17	29'-3"	str.						747
607	116	6'-2"	104	5'-6"	10"				1074
608	4	10'-8"	108	8'-9"	1'-9 1/2"	10 3/4"			64
609	6	8'-3"	str.						74
610	26	9'-6"	str.						371
611	4-series-4	4'-3" to 6'-3"	str.					8"	126
612	22	3'-9"	str.						124
613	53	7'-1"	105	3'-5"	2'-0"				627
614	71	6'-9"	100	5'-5"					720
615	1-series-7	4'-6" to 5'-6"	100	3'-2" to 4'-2"				2"	53
616	1-series-6	4'-6" to 5'-6"	100	3'-2" to 4'-2"				2 3/8"	45
617	16	27'-9"	str.						667
618	1	15'-8"	108	13'-9"	3 1/4"	1'-11"			23
619	2	13'-9"	str.						41
620	1	15'-9"	148	14'-2"	1'-11"	3 1/2"			24
621	2	14'-0"	str.						42
622	1	14'-3"	str.						21
623	1	10'-6"	str.						16
624	1-series-3	12'-0" to 16'-9"	str.					2'-4 1/2"	65
625	1-series-3	11'-9" to 16'-6"	str.					2'-4 1/2"	64
626	2	13'-6"	str.						41
627	2-series-3	8'-3" to 13'-0"	str.					2'-4 1/2"	96
628	2	20'-0"	str.						60
629	2	19'-9"	str.						59
630	25	18'-6"	154	1'-4"	1'-7"	7'-6"	7'-6"		695
631	4	16'-0"	str.						96
*632	12	16'-9"	str.						——
633	6	18'-0"	str.						162
634	16	5'-9"	str.						138
635	4	6'-9"	str.						41
636	7	7'-6"	str.						79
637	3	13'-10"	148	12'-0"	2'-0"	3"			62
638	3	13'-6"	108	11'-8"	3"	2'-0"			61
639	33	5'-8"	104	5'-0"	10"				281
640	3	18'-0"	133	6'-0"	12'-0"	71'-10"			81
641	3	18'-4"	133	6'-4"	12'-0"	71'-10"			83
								Total	12,492

NOTES:

*Bars included for payment with "Item 5-14, Railing."
Bar dimensions are given out to out.
Bars of a series shall vary in length by a constant increment.
For replacement schedule, see Sheet 103-7A.
For additional notes, see Sheet 116-7A.

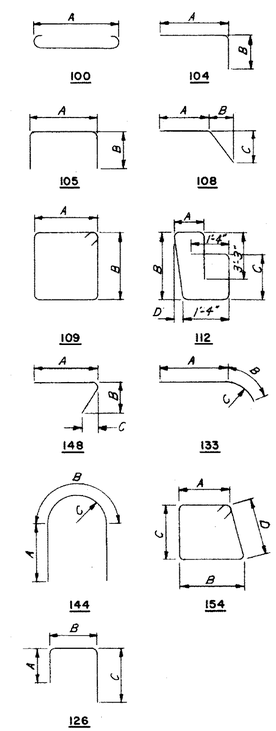

BENDING DIAGRAMS

H.N.T.B. BR. NO. 4 PART 7A

HOWARD, NEEDLES, TAMMEN & BERGENDOFF
CONSULTING ENGINEERS
KANSAS CITY CLEVELAND NEW YORK

WEST ABUTMENT-SECTIONS

INNER BELT FREEWAY OVER EAST 14th ST.

BR. NO. CUY-42-1854 STA. 70+89.23

Scale: 3/8" = 1'-0" STA. 73+96.25

WILLOW-INNER BELT FREEWAY
CLEVELAND CUYAHOGA COUNTY OHIO

DRAWN C.M.	TRACED	CHECKED R.H.L.	REVIEWED JCT	REVISED
DATE 1-14-59	DATE	DATE 1-22-59	DATE 11-13-59	SHEET 117

CUY-90-1651L/R - REAR ABUTMENT

NO.	REVISIONS	DATE
	RECORD DRAWINGS	03-14-11

DESIGN AGENCY: WALSH CONSTRUCTION HNTB

CLEVELAND'S INNERBELT BRIDGES 30 — OHIO DEPARTMENT OF TRANSPORTATION

BRIDGES 10 & 11

REMOVAL DETAILS - 4

BRIDGE NO. CUY-77-1597 L AND CUY-90-1651 L
I-90WB AND I-77SB RAMP OVER E 14TH STREET

DESIGNED	DRAWN	REVIEWED	DATE
RSB	JTW	JOL	03-11-11
CHECKED	CHECKED	STRUCTURE FILE NUMBER	
NJ	NJ	1807919/1807900	

CUY-90-14.90
PID No. 77332/85531

15/38

090_1651LRE004.dgn 1/8/2016 11:32:25 AM rstriegel

- INDICATES AREA TO BE REMOVED PER ITEM 202 PORTIONS OF STRUCTURE REMOVED, OVER 20 FOOT SPAN, AS PER PLAN

NOTES:

1. EXISTING ELEVATIONS SHOWN ON THE ORIGINAL BRIDGE PLANS HAVE NOT BEEN ADJUSTED TO THE CURRENT PROJECT SURVEY ELEVATIONS. ELEVATIONS NEED TO BE ADJUSTED TO THE CURRENT PROJECT SURVEY ELEVATOINS. FOR REAR ABUTMENT, PIER1, PIER2, PIER3 AND FORWARD ABUTMENT THE ELEVATION ADJUSTMENT IS APPROXIMATELY 0.94, 0.76, 0.70, 0.66 AND 0.64 FEET LOWER RESPECTIVELY THAN EXISTING ELEVATIONS SHOWN ON THE ORIGINAL BRIDGE PLANS.
2. FOR SECTION C-C AND D-D SEE SHEET 17/38.

FED. ROADS DIV. NO.	STATE	FED. AID PROJ. NO.	
2	OHIO		

119/181

CUYAHOGA COUNTY
CITY OF CLEVELAND
CUY-21-15.32
CUY-42-18.42

Note: Prefix "AD" shall be assigned to all bar marks.

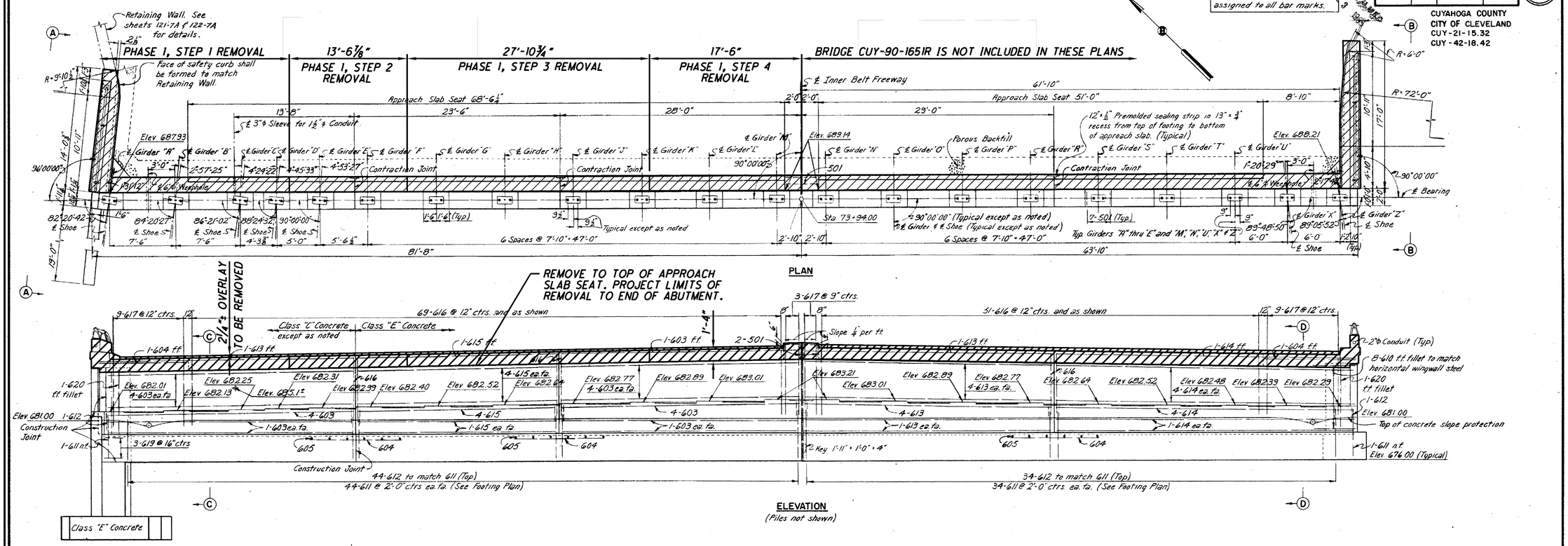

PLAN

ELEVATION
(Piles not shown)

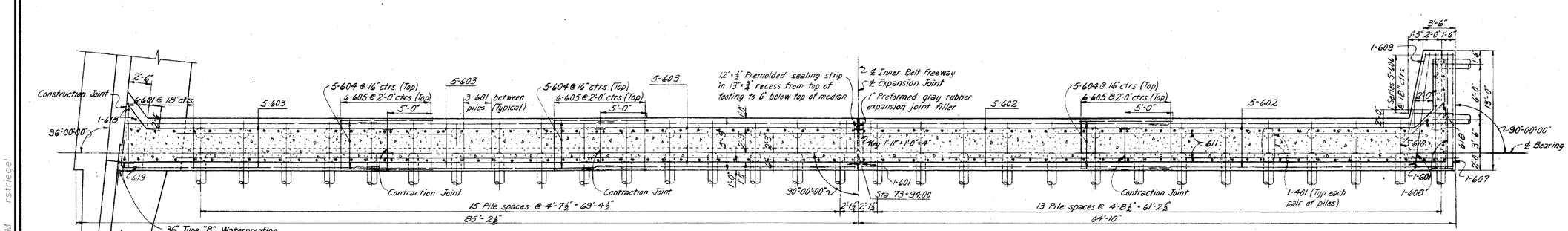

FOOTING PLAN

NOTES:
All piles shall be 12"φ Cast-in-place reinforced concrete.
All battered piles shall be battered 3 in 12 in direction shown.
Pile spacings are given along bottom of footing.
For details of end dam, see sheet 173-7A.
For details of masonry plates, see sheet 173-7A.
Reinforcement bars shall be 3 inches clear from bottom of footing and 2 inches elsewhere.
For Reinforcement Schedule, see sheet 120-7A.
For location of lighting conduit, see sheet 176-7A.
For Railing details, Railing Post spacing and Guard Rail connection details, see sheet 175-7A.

For Slope Protection details, abutment details, and additional notes, see sheet 120-7A
n.f. = near face, f.f. = far face, ea. fa. = each face

H.N.T.B. BR. NO. 4 PART 7A

HOWARD, NEEDLES, TAMMEN & BERGENDOFF
CONSULTING ENGINEERS
KANSAS CITY CLEVELAND NEW YORK

EAST ABUTMENT
INNER BELT FREEWAY OVER EAST 14th ST.
BR. NO. CUY-42-1854 STA. 70+89.23
Scale: 3/16" = 1'-0" STA. 73+96.25
WILLOW-INNER BELT FREEWAY
CLEVELAND CUYAHOGA COUNTY OHIO

DRAWN	TRACED	CHECKED	REVIEWED	REVISED
CKB		JCT	JCT	
DATE 10-28-59	DATE	DATE 1-4-59	DATE 11-13-59	SHEET 119

CUY-77-1597L AND
CUY-90-1651L/R - FORWARD ABUTMENT

NO.	REVISIONS	DATE
	RECORD DRAWINGS	03-14-11

DESIGN AGENCY: WALSH HNTB
WALSH CONSTRUCTION

CLEVELAND'S INNERBELT BRIDGE
OHIO DEPARTMENT OF TRANSPORTATION

BRIDGES 10 & 11

REMOVAL DETAILS - 5
BRIDGE NO. CUY-77-1597 L AND CUY-90-1651 L
I-90WB AND I-77SB RAMP OVER E 14TH STREET

DESIGNED	DRAWN	REVIEWED	DATE
RSB	JTW	JOL	03-11-11
CHECKED	CHECKED	STRUCTURE FILE NUMBER	
NJ	NJ	1807919/1807900	

CUY-90-14.90
PID No. 77332/85531

16/38

090_1651LRE005.dgn 1/8/2016 11:32:34 AM rstriegel

- INDICATES AREA TO BE REMOVED PER ITEM 202 PORTIONS OF STRUCTURE REMOVED, OVER 20 FOOT SPAN, AS PER PLAN

NOTE:

1. EXISTING ELEVATIONS SHOWN ON THE ORIGINAL BRIDGE PLANS HAVE NOT BEEN ADJUSTED TO THE CURRENT PROJECT SURVEY ELEVATIONS. ELEVATIONS NEED TO BE ADJUSTED TO THE CURRENT PROJECT SURVEY ELEVATOINS. FOR REAR ABUTMENT, PIER1, PIER2, PIER3 AND FORWARD ABUTMENT THE ELEVATION ADJUSTMENT IS APPROXIMATELY 0.94, 0.76, 0.70, 0.66 AND 0.64 FEET LOWER RESPECTIVELY THAN EXISTING ELEVATIONS SHOWN ON THE ORIGINAL BRIDGE PLANS.

BRIDGE CUY-90-1651R IS NOT INCLUDED IN THESE PLANS

BRIDGE CUY-90-1651R IS NOT INCLUDED IN THESE PLANS

RECEIVED JUL 3 1985

FED. ROADS DIV. NO.	STATE	FED. AID PROJ. NO.	
2	OHIO		

120 / 181

CUYAHOGA COUNTY
CITY OF CLEVELAND
CUY-21-15.32
CUY-42-18.42

Note: Type "C" Fence shall conform to Supplemental Specification SS-18, Fence and Gates, except as otherwise noted. All posts and rails shall be round. Knuckle finish to be provided at top rail.

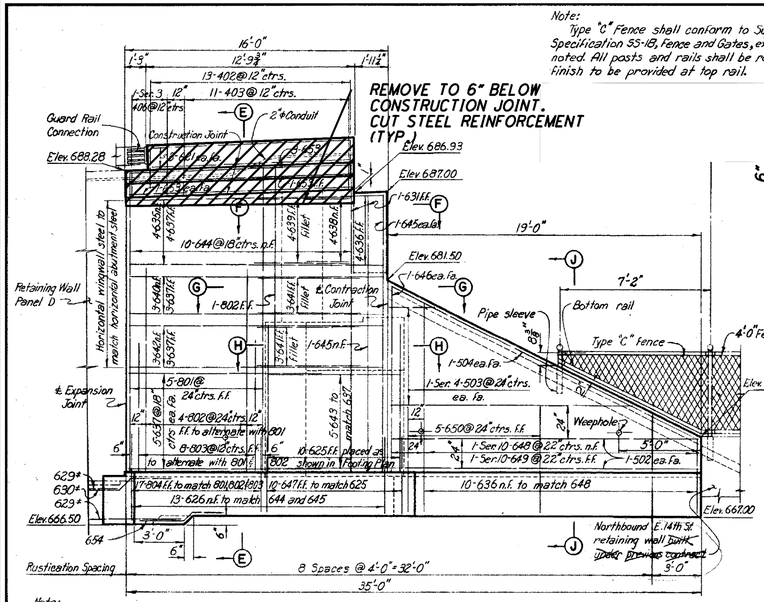

ELEVATION A-A
(Piles not shown)

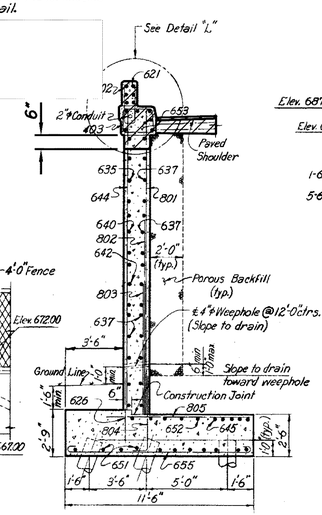

SECTION E-E

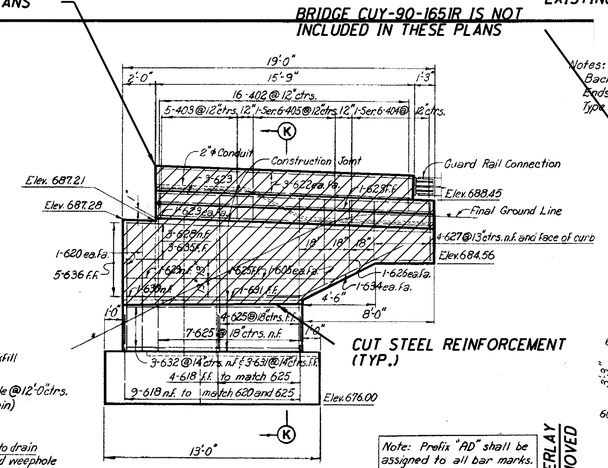

Note: Prefix "AD" shall be assigned to all bar marks.

ELEVATION B-B
(Piles not shown)

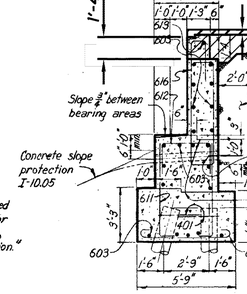

SECTION C-C

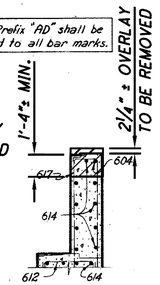

PART SECTION D-D

Notes:
Backfill shall be completed prior to construction of safety curb.
Ends of railing parapets shall be normal to top of safety curb.
Type "A" Railing not shown.

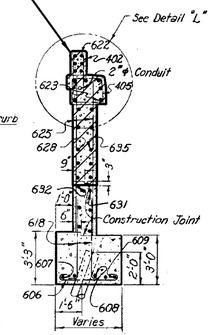

SECTION K-K

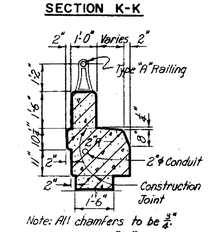

Note: All chamfers to be ¾"

DETAIL "L"
Scale: ¾"=1'-0"

BRIDGE CUY-90-1651R IS NOT INCLUDED IN THESE PLANS

Note:
designates Retaining Wall Panel D
Footing reinforcement: See Sheets 121-7A and 122-7A.

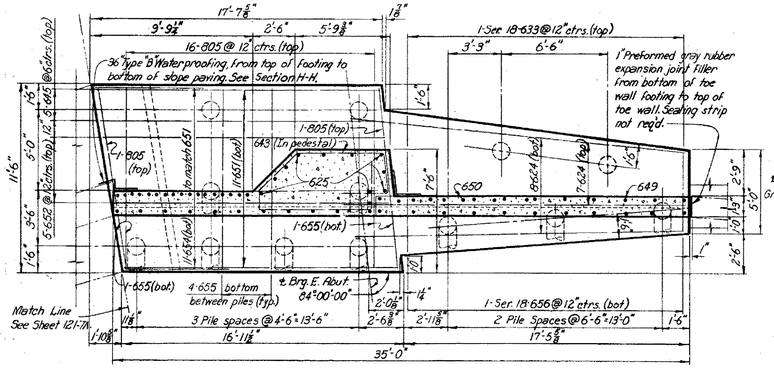

FOOTING PLAN

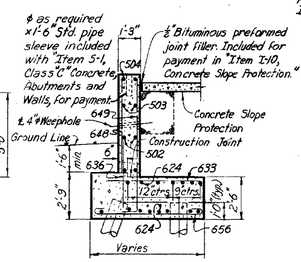

SECTION J-J

Notes:
Type "C" fence not shown.
For typical weephole placement, see Section E-E.

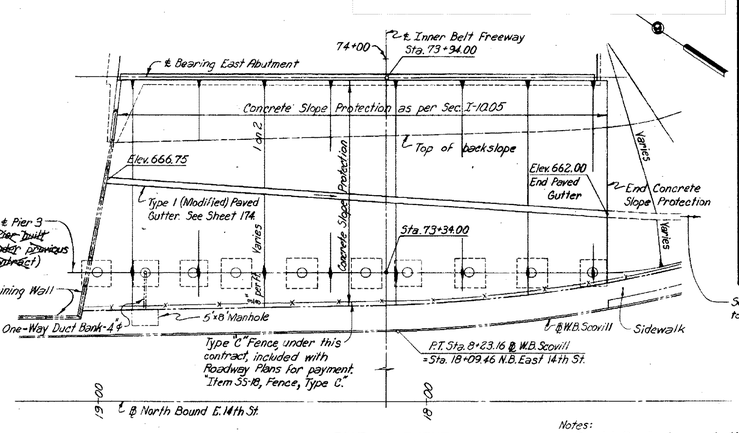

EAST ABUTMENT
SLOPE PROTECTION DETAILS
Scale: 1"=20'

Notes:
For details of slope protection not shown, see Sheet 174-7A.
Indicates construction under previous contract.

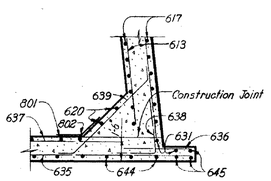

SECTION F-F

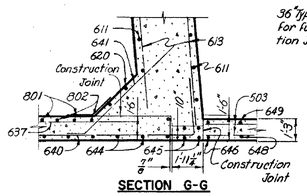

SECTION G-G

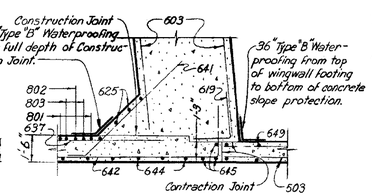

SECTION H-H

Note: 36" Type "B" Waterproofing as per Sec. S-3.06, included with "Item S-1, Class "C" Concrete, Abutments and Walls," for payment.

REINFORCEMENT SCHEDULE

Mark	Number	Length	Type	Dimensions A	B	C	D	Series increment	Weight (lbs.)
401	58	5'-10"	144	2'-0"	1'-10"				226
402	29	5'-9"	105	8"	2'-8"				111
403	16	6'-7"	109	1'-8"	1'-5"				70
404	1-Ser. 6	4'-7" to 5'-11"	109	8"to14"	1'-5"			3 3/8"	21
405	1-Ser. 6	6'-7" to 6'-7"	109	15"to18"	1'-5"			1 3/8"	25
406	1-Ser. 3	3'-3" to 6'-7"	109	10"to18"	1'-5"			3"	12
501	151	4'-7"	105	1'-8"	1'-7"				722
502	4	18'-9"	Str.						78
503	2-Ser. 4	2'-9" to 14'-9"	Str.					4'-0"	73
504	2	20'-9"	Str.						43
601	32	6'-9"	100	5'-5"					933
602	10	33'-3"	Str.						499
603	48	27'-9"	Str.						2,001
604	17	10'-0"	Str.						255
605	20	5'-3"	Str.						158
606	1-Ser. 5	4'-6" to 5'-10"	100	32"to49"				4"	39
607	1	14'-6"	104	12'-8"	2'-0"				22
608	3	12'-6"	Str.						56
609	1	9'-6"	Str.						14
610	8	7'-5"	108	6'-8"	10"	12			89
611	158	6'-2"	104	5'-6"	10"				1463
612	80	8'-1"	105	3'-5"	2'-6"				971
613	18	28'-9"	Str.						777
614	17	34'-6"	Str.						881
615	17	29'-9"	Str.						594
616	120	19'-9"	112	11"	7'-6"	6'-2"	1'-5"		3560
617	24	19'-7"	109	1'-6"	1'-5"				670
618	16	5'-8"	104	5'-0"	10"				136
619	3	3'-4"	148	3'-0"	2'-6"	1			24
620	7	7'-9"	Str.						81
*621	6	12'-6"	Str.						–
*622	6	13'-6"	Str.						–
623	6	16'-9"	Str.						151
624	15	20'-9"	Str.						467
625	22	9'-3"	Str.						306
626	15	4'-6"	Str.						101
627	8	3'-6"	Str.						42
628	3	18'-9"	Str.						84
629	1	12'-9"	Str.						19
630	1	10'-9"	Str.						16
631	6	7'-0"	Str.						63
632	3	12'-6"	104	1'-11"	10'-9"				56
633	1-Ser. 18	4'-9" to 6'-9"	Str.					1 1/16"	155
634	2	8'-10"	108	1'-11"	7'-0"	6			27
635	9	15'-9"	Str.						166
636	19	4'-0"	Str.						114
637	20	11'-9"	Str.						353
638	4	5'-9"	148	4'-0"	1'-11"	1			35
639	4	8'-0"	141	6'-6"	10"				48
640	3	19'-6"	148	15'-9"	4'-0"	1			88
641	6	8'-2"	108	7'-8"	10"	12			74
642	3	19'-7"	104	15'-8"	3'-1"				84
643	5	24'-7"	135	7'-0"	3'-0"	2'-9"	1'-4"		165
644	10	18'-3"	Str.						274
645	8	17'-0"	Str.						204
646	2	11'-6"	Str.						35
647	10	5'-2"	104	4'-6"	10"				78
648	1-Ser. 10	2'-0" to 10'-6"	Str.					1 1/16"	94
649	1-Ser. 10	5'-2" to 13'-8"	104	4"to180"	10"			1 1/16"	141
650	5	7'-9"	104	6'-6"	10"				34
651	17	14'-0"	Str.						231
652	5	16'-9"	Str.						126
653	6	13'-9"	Str.						124
654	11	3'-5"	118	2'-10"	6"	6"			89
655	16	12'-6"	100	11'-2"					300
656	1-Ser. 18	6'-0" to 9'-8"	100	18"to34"				2 9/16"	212
801	5	18'-6"	Str.						247
802	5	12'-0"	Str.						160
803	8	9'-0"	Str.						171
804	17	5'-8"	104	4'-9"	1'-1"				257
805	18	9'-0"	Str.						433
								Total	20,468

H.N.T.B. BR. NO. 4 PART 7A

HOWARD, NEEDLES, TAMMEN & BERGENDOFF
CONSULTING ENGINEERS
KANSAS CITY CLEVELAND NEW YORK

EAST ABUTMENT DETAILS

INNER BELT FREEWAY OVER EAST 14th ST.
BR. NO. CUY-42-1854 STA. 70+89.23
Scale: 1/4"=1'-0" Except as noted STA. 73+96.25

WILLOW-INNER BELT FREEWAY
CLEVELAND CUYAHOGA COUNTY OHIO

DRAWN F.S.J.	TRACED	CHECKED CKB	REVIEWED JCT	REVISED F.S.J. 11-24-59
DATE 10-29-59	DATE	DATE 11-4-59	DATE 11-13-59	SHEET 120

CUY-77-1597L AND
CUY-90-1651L/R - FORWARD ABUTMENT

NO.	REVISIONS	DATE
	RECORD DRAWINGS	03-14-11

DESIGN AGENCY: WALSH CONSTRUCTION

BRIDGES 10 & 11

CLEVELAND'S INNERBELT BRIDGE 90 — OHIO DEPARTMENT OF TRANSPORTATION

REMOVAL DETAILS - 6

BRIDGE NO. CUY-77-1597 L AND CUY-90-1651 L
I-90WB AND I-77SB RAMP OVER E 14TH STREET

DESIGNED	DRAWN	REVIEWED	DATE
RSB	JTW	JOL	03-11-11
CHECKED	CHECKED	STRUCTURE FILE NUMBER	
NJ	NJ	1807919/1807900	

CUY-90-14.90
PID No. 77332/85531

17/38

17/38

090_1651LREO06.dgn 1/8/2016 11:32:43 AM rstriegel

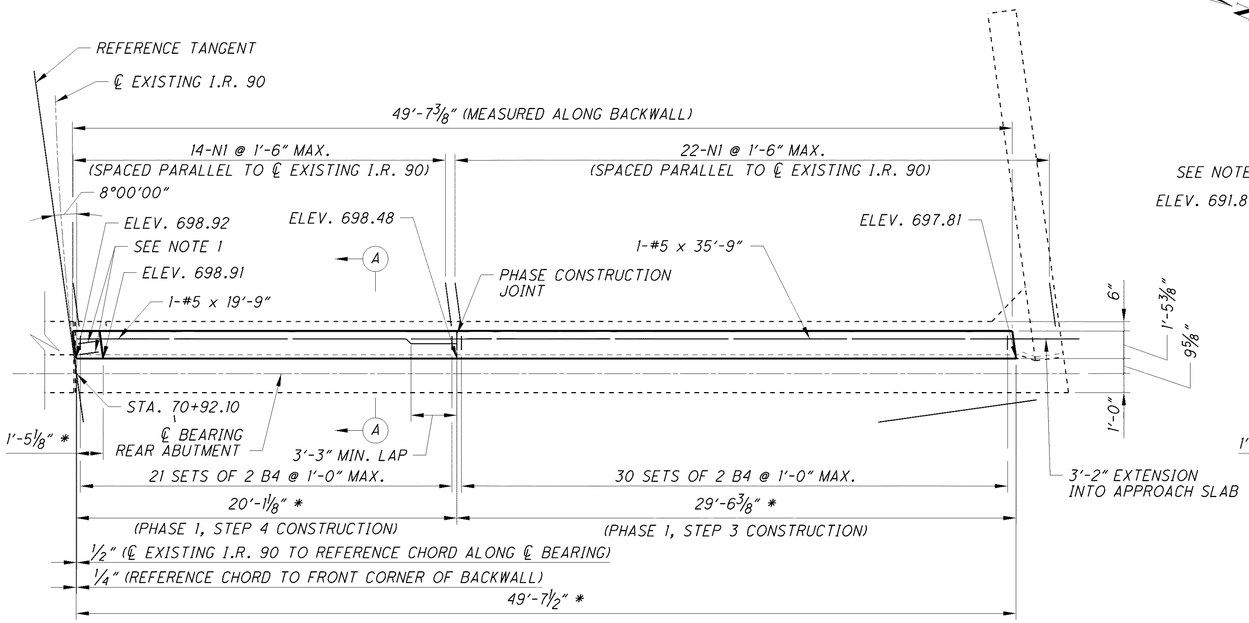

* MEASURED ALONG FRONT FACE OF BACKWALL

PLAN

(REAR ABUTMENT I.R. 90 WESTBOUND)
(FOOTING NOT SHOWN FOR CLARITY)

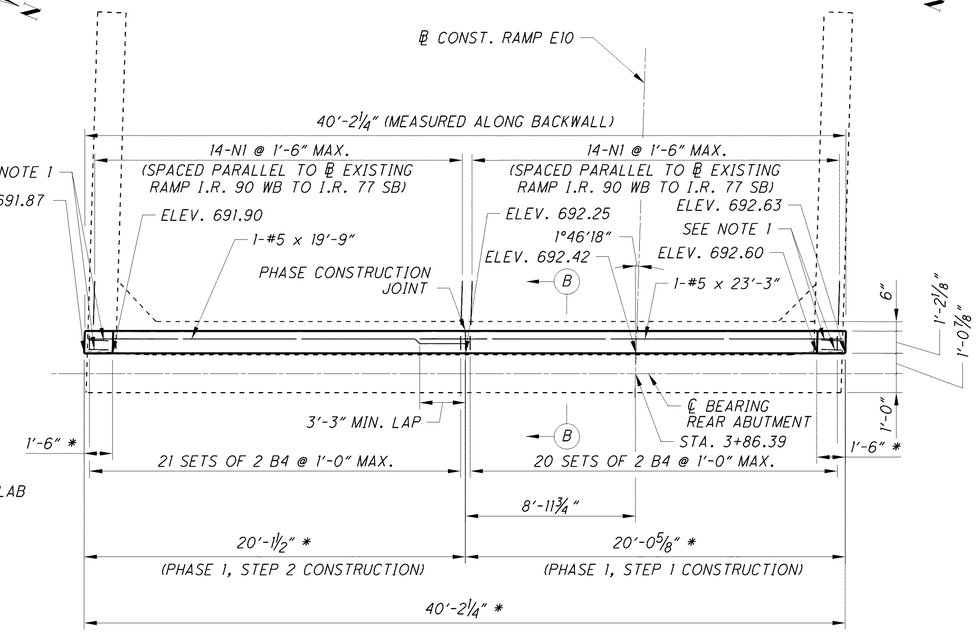

* MEASURED ALONG FRONT FACE OF BACKWALL

PLAN

(REAR ABUTMENT CONST. RAMP E10)
(FOOTING NOT SHOWN FOR CLARITY)

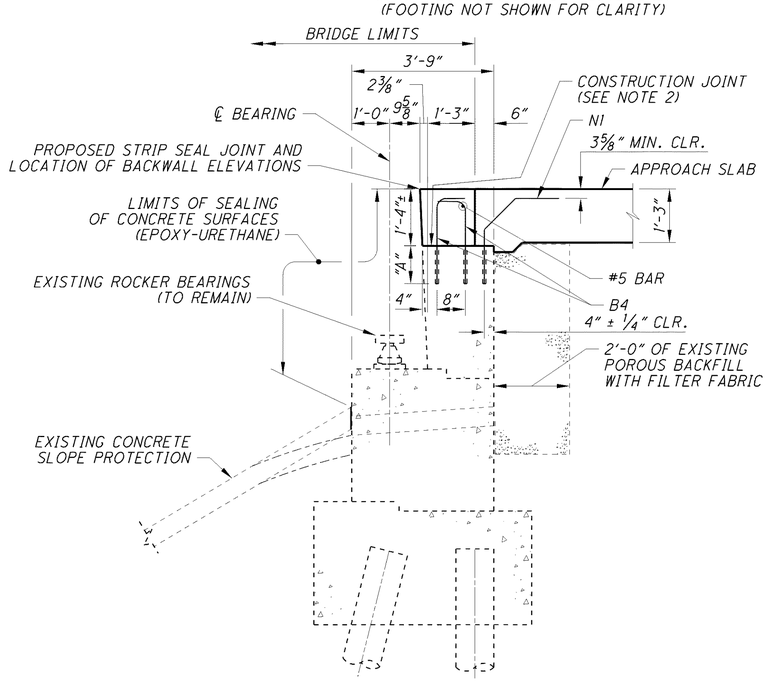

SECTION A-A

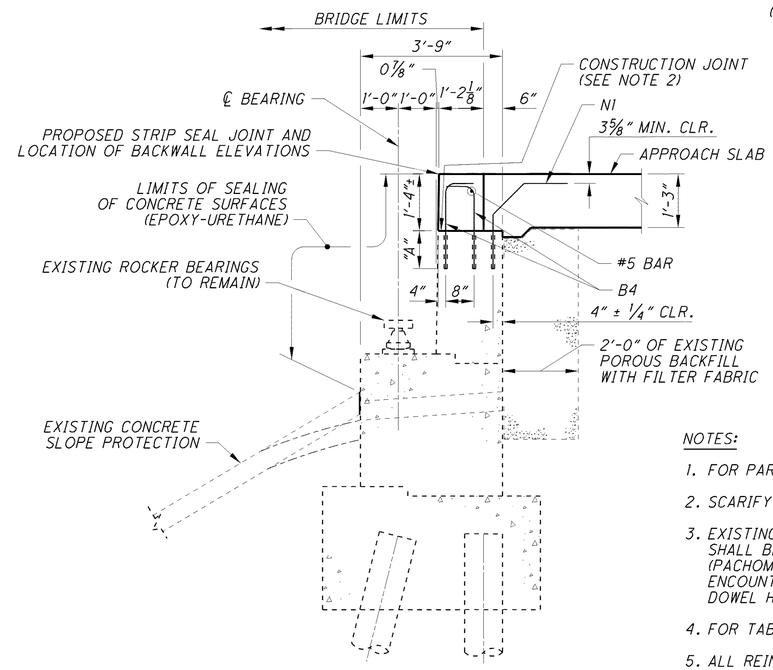

SECTION B-B

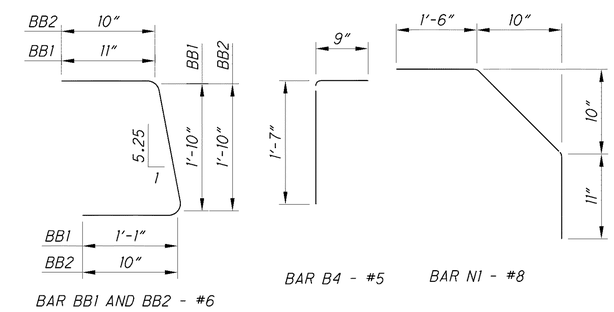

MINIMUM LAP LENGTH TABLE	
#5	3'-3"

NOTES:

1. FOR PARAPET REINFORCING DETAILS, SEE SHEET 37/38 .
2. SCARIFY THE TOP OF EXISTING SURFACES TO A DEPTH OF 1/4".
3. EXISTING REINFORCING STEEL BARS IN THE AREA OF THE DOWEL HOLES SHALL BE LOCATED WITH THE AID OF A REINFORCING STEEL BAR LOCATER (PACHOMETER) PRIOR TO DRILLING THE HOLES. IF AN EXISTING BAR IS ENCOUNTERED AT THE SAME LOCATION AS A PROPOSED DOWEL HOLE, THE DOWEL HOLE SHALL BE MOVED TO EITHER SIDE OF THE EXISTING BAR.
4. FOR TABLE OF DIMENSION "A", SEE SHEET 19/38 .
5. ALL REINFORCING STEEL SHALL BE EPOXY COATED AND PER CMS 509.
6. BACKWALL CONCRETE: IN ADDITION TO 511.10, DO NOT PLACE BACKWALL CONCRETE ABOVE THE CONSTRUCTION JOINT AT THE APPROACH SLAB SEAT UNTIL AFTER THE DECK CONCRETE IN THE SPAN ADJACENT TO THE ABUTMENT HAS BEEN PLACED.

NO.	REVISIONS	DATE
	RECORD DRAWINGS	03-14-11

DESIGN AGENCY: WALSH HNTB (WALSH CONSTRUCTION)

CLEVELAND'S INNERBELT BRIDGE — OHIO DEPARTMENT OF TRANSPORTATION

BRIDGES 10 & 11

REAR ABUTMENT DETAILS

BRIDGE NO. CUY-77-1597 L AND CUY-90-1651 L
I-90WB AND I-77SB RAMP OVER E 14TH STREET

DESIGNED	DRAWN	REVIEWED	DATE
RSB	RSB	JOL	03-11-11
CHECKED	CHECKED	STRUCTURE FILE NUMBER	
NJ	NJ	1807919/1807900	

CUY-90-14.90
PID No. 77332/85531

18/38

18/38

090_1651LAR001.dgn 1/8/2016 11:32:52 AM rstriegel

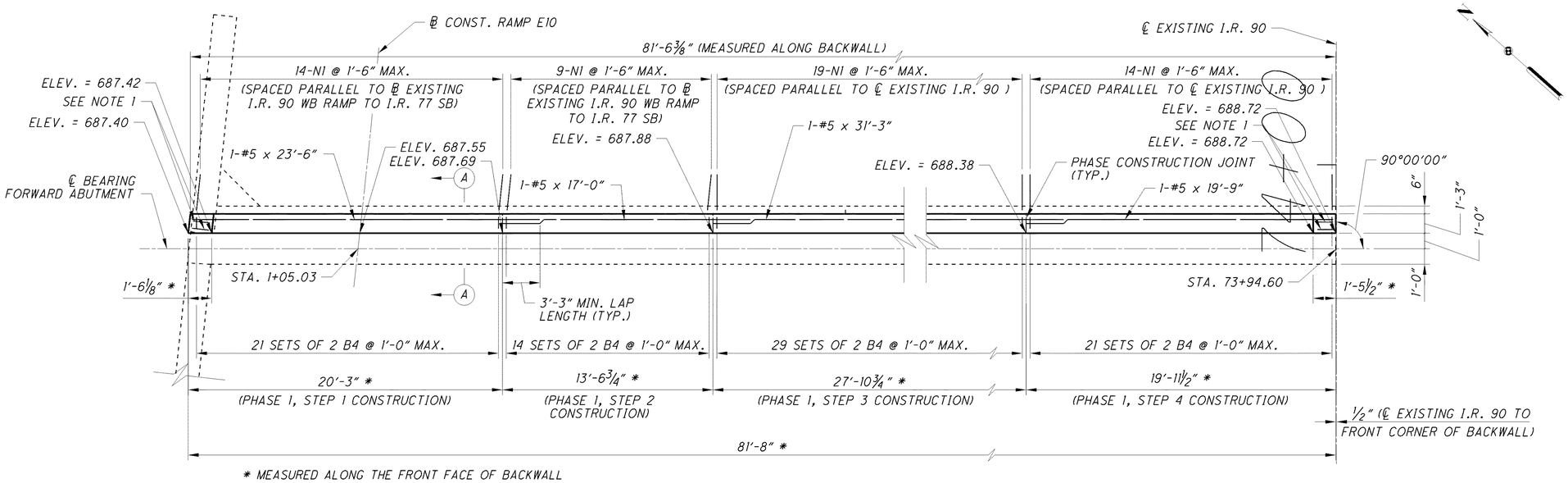

PLAN

(FORWARD ABUTMENT I.R. 90 WESTBOUND)
(FOOTING NOT SHOWN FOR CLARITY)

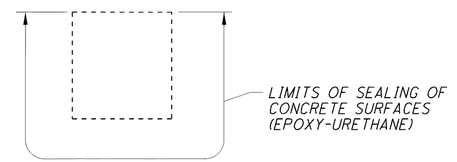

SECTION C-C

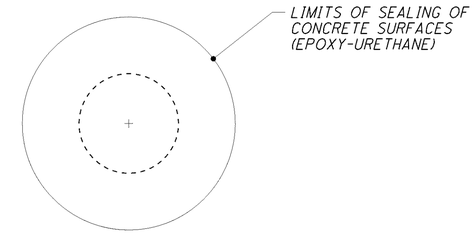

SECTION B-B

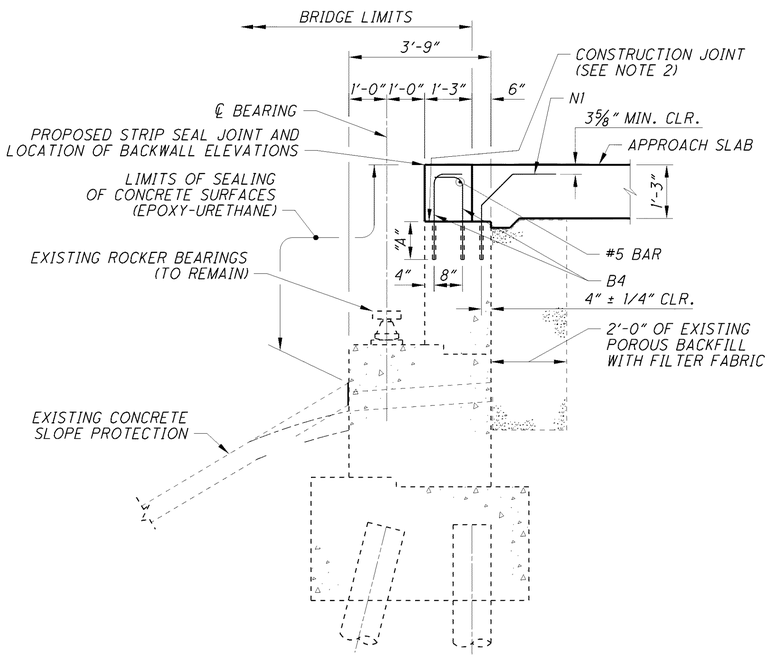

SECTION A-A

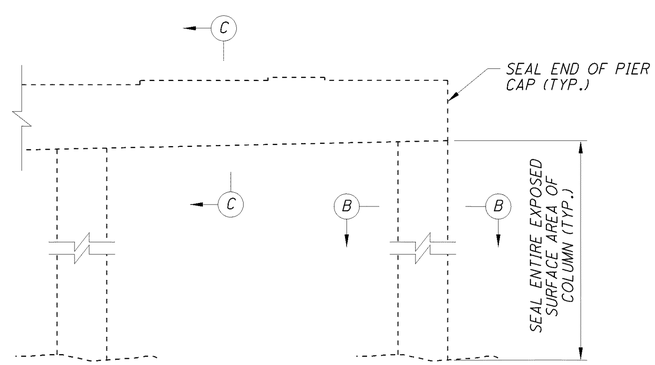

PIER PARTIAL ELEVATION

MIN. EPOXY DOWEL DEPTHS *	
REBAR SIZE	DIMENSION "A"
#5	5"
#8	9"

* DOWEL DEPTHS SHALL BE ADJUSTED PER MANUFACTURERS SPECIFICATIONS

NOTES:

1. FOR REBAR DETAILS AND BAR BENDING DIAGRAMS, SEE SHEET 18/38.
2. SCARIFY THE TOP OF EXISTING SURFACES TO A DEPTH OF 1/4".
3. FOR ADDITIONAL NOTES, SEE SHEET 18/38.

MINIMUM LAP LENGTH TABLE	
#5	3'-3"

NO.	REVISIONS	DATE
	RECORD DRAWINGS	03-14-11

DESIGN AGENCY: WALSH HNTB (WALSH CONSTRUCTION)

CLEVELAND'S TUNNELBELT BRIDGE — OHIO DEPARTMENT OF TRANSPORTATION

BRIDGES 10 & 11

FORWARD ABUTMENT AND PIER DETAILS

BRIDGE NO. CUY-77-1597 L AND CUY-90-1651 L
I-90WB AND I-77SB RAMP OVER E 14TH STREET

DESIGNED	DRAWN	REVIEWED	DATE
RSB	RSB	JOL	03-11-11
CHECKED	CHECKED	STRUCTURE FILE NUMBER	
NJ	NJ	1807919/1807900	

CUY-90-14.90
PID No. 77332/85531

090_1651LAF001.dgn 1/8/2016 11:32:59 AM rstriegel

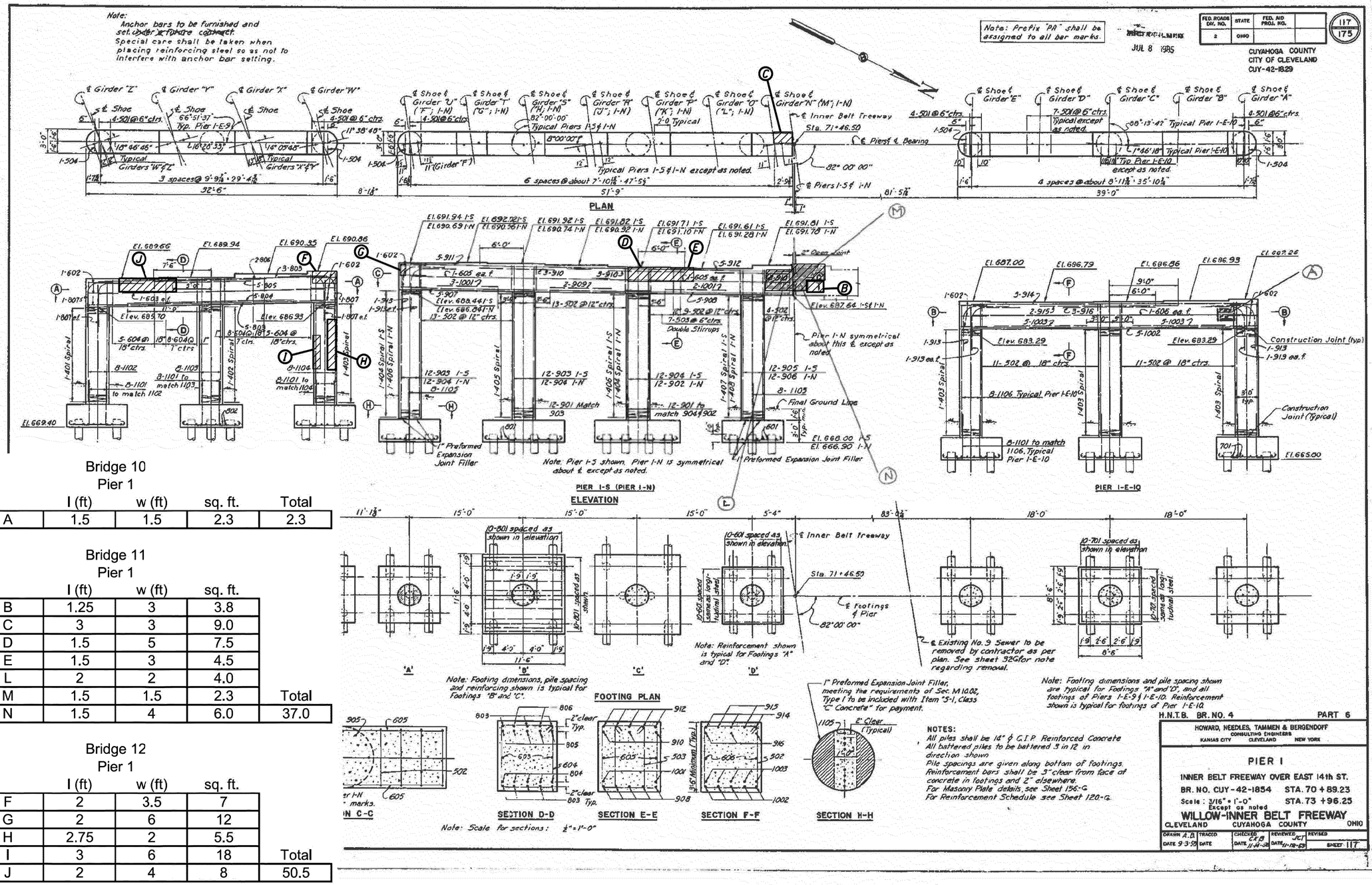

Bridge 10
Pier 1

	l (ft)	w (ft)	sq. ft.	Total
A	1.5	1.5	2.3	2.3

Bridge 11
Pier 1

		l (ft)	w (ft)	sq. ft.	
*	B	1.25	3	3.8	
x	C	3	3	9.0	
*	D	1.5	5	7.5	
*	E	1.5	3	4.5	
	L	2	2	4.0	
	M	1.5	1.5	2.3	Total
	N	1.5	4	6.0	37.0

Bridge 12
Pier 1

		l (ft)	w (ft)	sq. ft.	
*	F	2	3.5	7	
*	G	2	6	12	
*	H	2.75	2	5.5	
*	I	3	6	18	Total
*	J	2	4	8	50.5

x - INDICATES PATCHING IS ON BOTTOM SIDE
* - INDICATES PATCHING IS ON BACKSIDE

⚠ -- ADDED PATCHED LOCATIONS

NO.	REVISIONS	DATE
	RECORD DRAWINGS	01-29-13

DESIGN AGENCY
WALSH CONSTRUCTION
HNTB

CLEVELAND'S INNERBELT BRIDGE
OHIO DEPARTMENT OF TRANSPORTATION

BRIDGE 10
BRIDGE 11
BRIDGE 12

RECORD OF PIER 1 PATCHING
BRIDGE NO. CUY-90-1651L
I-90EB, I-90WB AND IR-77 RAMP OVER EAST 14TH

DRAWN | REVIEWED | DATE
CHECKED | STRUCTURE FILE NUMBER
DESIGNED | CHECKED

CUY-90-14.90
PID No. 77332/85531

19A/38

19A
38

090_1651LPI001.dgn 1/8/2016 11:33:05 AM rstriegel

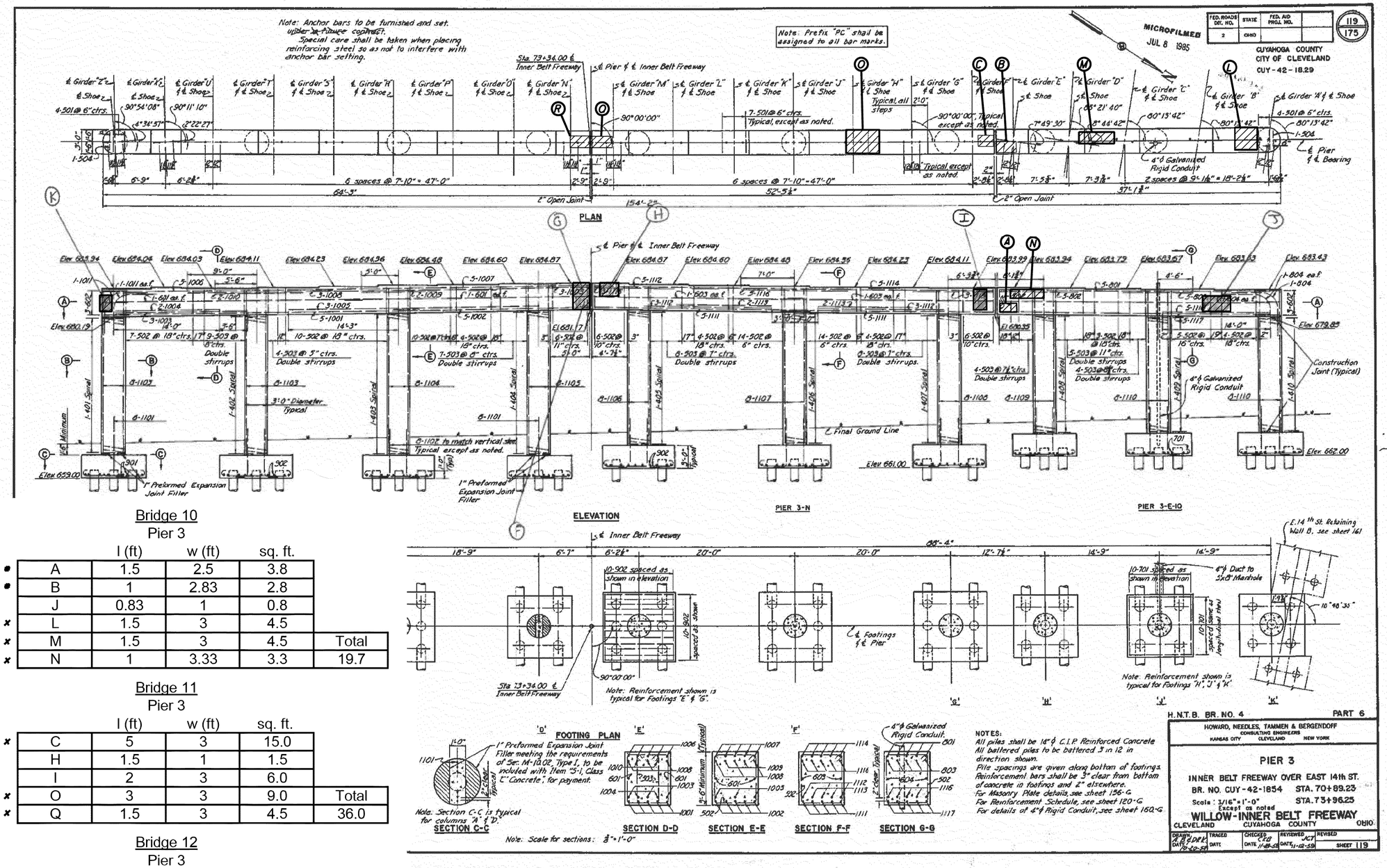

Bridge 10
Pier 3

		l (ft)	w (ft)	sq. ft.	
●	A	1.5	2.5	3.8	
●	B	1	2.83	2.8	
	J	0.83	1	0.8	
×	L	1.5	3	4.5	
×	M	1.5	3	4.5	Total
×	N	1	3.33	3.3	19.7

Bridge 11
Pier 3

		l (ft)	w (ft)	sq. ft.	
×	C	5	3	15.0	
	H	1.5	1	1.5	
	I	2	3	6.0	
×	O	3	3	9.0	Total
×	Q	1.5	3	4.5	36.0

Bridge 12
Pier 3

		l (ft)	w (ft)	sq. ft.	
	G	1.5	2	3.0	
	K	3	1.5	4.5	Total
×	R	3	3	9.0	16.5

× - INDICATES PATCHING IS ON BOTTOM SIDE
● - INDICATES PATCHING IS ON BACKSIDE

⚠ -- ADDED PATCHED LOCATIONS

NO.	REVISIONS	DATE
	RECORD DRAWINGS	01-29-13

DESIGN AGENCY: WALSH HNTB — WALSH CONSTRUCTION

BRIDGE 10
BRIDGE 11
BRIDGE 12

RECORD OF PIER 3 PATCHING
BRIDGE NO. CUY-90-1651L
I-90EB, I-90WB AND IR-77 RAMP OVER EAST 14TH

DRAWN | REVIEWED | DATE
CHECKED | STRUCTURE FILE NUMBER
DESIGNED | CHECKED

CUY-90-14.90
PID No. 77332/85531

19B / 38

19B / 38

090_1651LPI002.dgn 1/8/2016 11:33:15 AM rstriegel

SCUPPER LOCATIONS (SEE NOTE 7)	
A	STA. 72+67.00
B	STA. 72+71.00
C	STA. 72+76.00
D	STA. 72+81.00
E	STA. 73+83.00
F	STA. 73+88.00
G	STA. 3+82.00 ◐

◐ STA. ALONG ℄ CONST. RAMP E10

ANGLES	
A	84° 52′ 02″
B	80° 13′ 42″
C	82° 20′ 42″
D	84° 20′ 27″
E	86° 21′ 02″
F	88° 24′ 32″

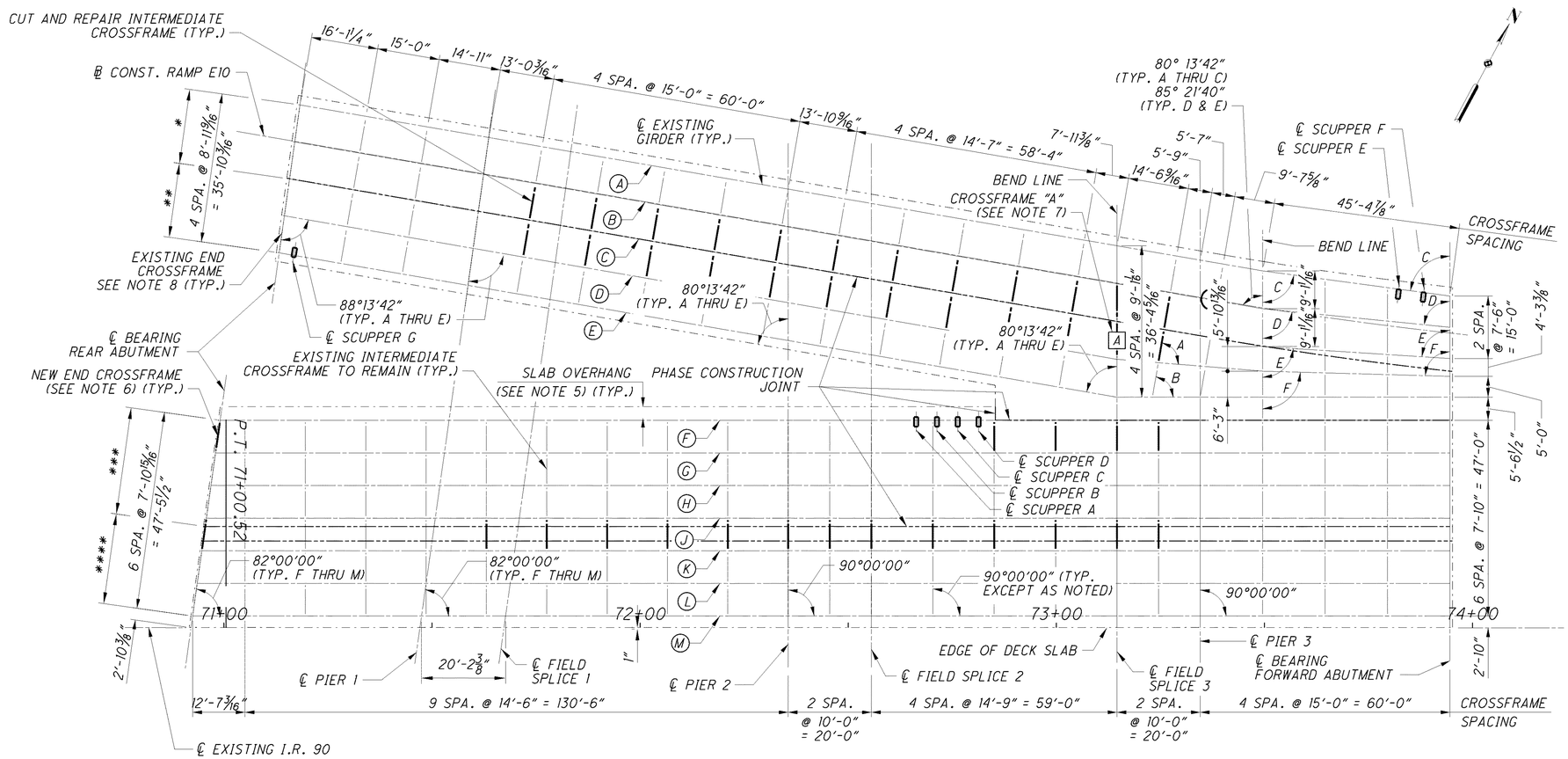

FRAMING PLAN

(SEE NOTE 4)

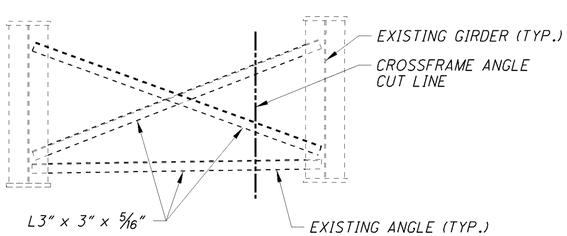

TYPICAL CROSSFRAME CUT LINE DETAIL

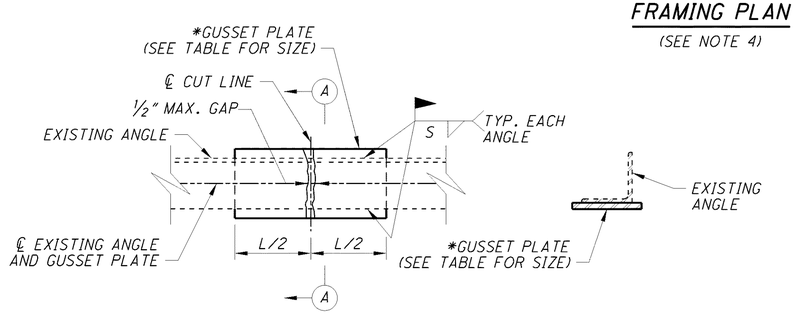

* PLACE ON HORIZONTAL LEG OF EXISTING ANGLE

TYPICAL REPAIR DETAIL

SECTION A-A

CROSSFRAME ANGLE REPAIR TABLE		
EXISTING ANGLE SIZE	GUSSET PLATE SIZE	WELD SIZE S
L3″ x 3″ x 5/16″	⅜″ x 5″ x 1′-4″	¼″
L4″ x 4″ x 5/16″	⅜″ x 6″ x 1′-10″	5/16″

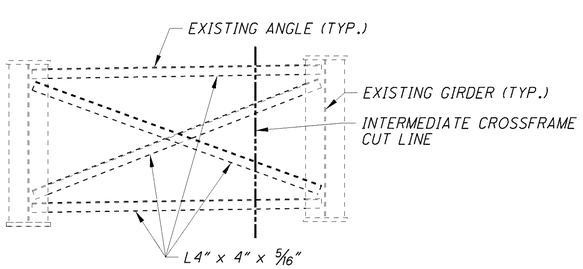

CROSSFRAME "A" CUT LINE DETAIL

LEGEND:

* - PHASE 1, STEP 1 CONSTRUCTION
** - PHASE 1, STEP 2 CONSTRUCTION
*** - PHASE 1, STEP 3 CONSTRUCTION
**** - PHASE 1, STEP 4 CONSTRUCTION

NOTES:

1. ALL NEW STRUCTURAL STEEL SHALL BE ASTM GRADE A709 GRADE 50.
2. ALL NEW STRUCTURAL STEEL SHALL BE PAINTED WITH THE IZEU PAINT SYSTEM, COLOR TO MATCH EXISTING. FOR MORE DETAILS REGARDING PAINT ON NEW STRUCTURAL STEEL, REFER TO CMS 514.
3. EXISTING STRUCTURAL STEEL PAINT DAMAGED DUE TO REHABILITATION WORK SHALL BE PAINTED WITH THE OZEU PAINT SYSTEM, COLOR TO MATCH EXISTING. FOR MORE DETAILS REGARDING PAINT ON EXISTING STRUCTURAL STEEL, REFER TO CMS 514.
4. DETAILS AND DIMENSIONS SHOWN ON THESE PLANS PERTAINING TO THE EXISTING FRAMING PLAN HAVE BEEN OBTAINED FROM PLAN OF THE EXISTING STRUCTURE. CONSEQUENTLY , THEY ARE INDICATIVE OF THE EXISTNG STRUCTURE AND THE PROPOSED WORK, BUT THEY SHALL BE CONSIDERED TENTATIVE AND APPROXIMATE.
5. FOR SLAB OVERHANG DIMENSIONS, SEE SHEET 27/38.
6. FOR NEW END CROSSFRAME DETAILS, REFER TO ODOT STANDARD GSD-1-96.
7. FOR ADDITIONAL SCUPPER DETAILS, SEE SHEET 24/38.
8. FOR END CROSSFRAME RETROFIT DETAILS SEE SHEET 23/38.

NO.	REVISIONS	DATE
	RECORD DRAWINGS	01/29/13

DESIGN AGENCY: WALSH HNTB, WALSH CONSTRUCTION

CLEVELAND'S INNERBELT BRIDGES — OHIO DEPARTMENT OF TRANSPORTATION

BRIDGES 10 & 11

FRAMING PLAN

BRIDGE NO. CUY-77-1597 L AND CUY-90-1651 L
I-90WB AND I-77SB RAMP OVER E 14TH STREET

DESIGNED	DRAWN	REVIEWED	DATE
RSB	RSB	JOL	03-11-11
CHECKED	CHECKED	STRUCTURE FILE NUMBER	
JRS	NJ	1807919/1807900	

CUY-90-14.90
PID No. 77332/85531

090_1651LSD001.dgn 1/8/2016 11:33:29 AM rstriegel

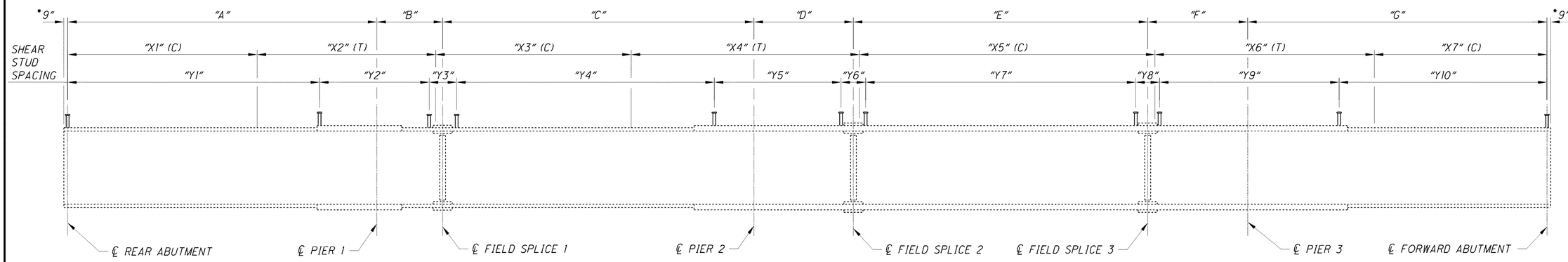

GIRDER ELEVATION

(CUY-90-1651L)

TABLE OF DIMENSIONS														
	"A"	"B"	"C"	"D"	"E"	"F"	"G"	"X1"	"X2"	"X3"	"X4"	"X5"	"X6"	"X7"
GIRDER F	55'-0"±	20'-2 3/8"±	61'-3 9/16"±	20'-0"±	59'-0"±	20'-0"±	60'-0"±	38'-0"	33'-0"	40'-9 1/4"	45'-0"	60'-0"	44'-0"	34'-8 5/8"
GIRDER G	55'-0"±	20'-2 3/8" ±	62'-4 13/16"±	20'-0"±	59'-0"±	20'-0"±	60'-0"±	38'-0"	33'-0"	41'-10 9/16"	45'-0"	60'-0"	44'-0"	34'-8 5/8"
GIRDER H	55'-0"±	20'-2 3/8"±	63'-6"±	20'-0"±	59'-0"±	20'-0"±	60'-0"±	38'-0"	33'-0"	41'-11 3/4"	46'-0"	60'-0"	44'-0"	34'-8 5/8"
GIRDER J	55'-0"±	20'-2 3/8"±	64'-7 3/16"±	20'-0"±	59'-0"±	20'-0"±	60'-0"±	38'-0"	33'-0"	42'-0 15/16"	47'-0"	60'-0"	44'-0"	34'-8 5/8"
GIRDER K	55'-0"±	20'-2 3/8"±	65'-8 7/16"±	20'-0"±	59'-0"±	20'-0"±	60'-0"±	38'-0"	33'-0"	43'-2 3/16"	47'-0"	60'-0"	44'-0"	34'-8 5/8"
GIRDER L	55'-0"±	20'-2 3/8"±	66'-9 5/8"±	20'-0"±	59'-0"±	20'-0"±	60'-0"±	38'-0"	33'-0"	43'-3 3/8"	48'-0"	60'-0"	44'-0"	34'-8 5/8"
GIRDER M	55'-0"±	20'-2 3/8"±	67'-10 13/16"±	20'-0"±	59'-0"±	20'-0"±	60'-0"±	38'-0"	33'-0"	44'-4 9/16"	48'-0"	60'-0"	44'-0"	34'-8 5/8"

SHEAR STUD SPACING										
	"Y1"	"Y2"	"Y3"	"Y4"	"Y5"	"Y6"	"Y7"	"Y8"	"Y9"	"Y10"
GIRDER F	61 SPA. @ 10" = 50'-10"	15 SPA. @ 1'-6" = 22'-6"	3'-10"	61 SPA. @ 10" = 50'-10"	13 SPA. @ 2'-0" = 26'-0"	4'-4 1/8"	65 SPA. @ 10" = 54'-2"	5'-4"	18 SPA. @ 2'-0" = 36'-0"	50 SPA. @ 10" = 41'-8"
GIRDER G	61 SPA. @ 10" = 50'-10"	15 SPA. @ 1'-6" = 22'-6"	3'-10"	63 SPA. @ 10" = 52'-6"	13 SPA. @ 2'-0" = 26'-0"	4'-4 1/8"	65 SPA. @ 10" = 54'-2"	4'-9 1/4"	18 SPA. @ 2'-0" = 36'-0"	50 SPA. @ 10" = 41'-8"
GIRDER H	61 SPA. @ 10" = 50'-10"	15 SPA. @ 1'-6" = 22'-6"	3'-10"	64 SPA. @ 10" = 53'-4"	13 SPA. @ 2'-0" = 26'-0"	4'-4 1/8"	65 SPA. @ 10" = 54'-2"	5'-0 1/2"	18 SPA. @ 2'-0" = 36'-0"	50 SPA. @ 10" = 41'-8"
GIRDER J	61 SPA. @ 10" = 50'-10"	15 SPA. @ 1'-6" = 22'-6"	3'-10"	65 SPA. @ 10" = 54'-2"	13 SPA. @ 2'-0" = 26'-0"	4'-4 1/8"	65 SPA. @ 10" = 54'-2"	5'-3 3/4"	18 SPA. @ 2'-0" = 36'-0"	50 SPA. @ 10" = 41'-8"
GIRDER K	61 SPA. @ 10" = 50'-10"	15 SPA. @ 1'-6" = 22'-6"	3'-10"	66 SPA. @ 10" = 55'-0"	13 SPA. @ 2'-0" = 26'-0"	4'-4 1/8"	65 SPA. @ 10" = 54'-2"	5'-6 7/8"	18 SPA. @ 2'-0" = 36'-0"	50 SPA. @ 10" = 41'-8"
GIRDER L	61 SPA. @ 10" = 50'-10"	15 SPA. @ 1'-6" = 22'-6"	3'-10"	68 SPA. @ 10" = 56'-8"	13 SPA. @ 2'-0" = 26'-0"	4'-4 1/8"	65 SPA. @ 10" = 54'-2"	5'-0"	18 SPA. @ 2'-0" = 36'-0"	50 SPA. @ 10" = 41'-8"
GIRDER M	61 SPA. @ 10" = 50'-10"	15 SPA. @ 1'-6" = 22'-6"	3'-10"	69 SPA. @ 10" = 57'-6"	13 SPA. @ 2'-0" = 26'-0"	4'-4 1/8"	65 SPA. @ 10" = 54'-2"	5'-3 3/8"	18 SPA. @ 2'-0" = 36'-0"	50 SPA. @ 10" = 41'-8"

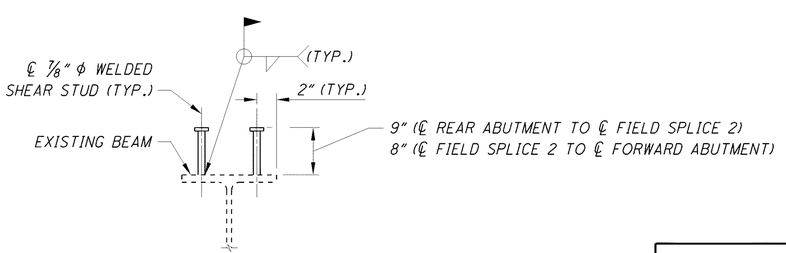

SHEAR STUD DETAIL

(SHEAR STUD PLACEMENT ON BOLTED FLANGE PLATES IS NOT PERMITTED. ADJUST SPACING AS NECESSARY TO AVOID INTERFERENCE.)

GIRDER REMOVAL LENGTH							
GIRDER LINE	F	G	H	J	K	L	M
FORWARD ABUTMENT	3"	3"	3"	3 1/4"	3 1/2"	2 1/2"	2 1/2"
REAR ABUTMENT	1 1/4"	1"	1 1/4"	3/4"	7/8"	1"	1"
SEE NOTE 2							

LEGEND:

(T) DENOTES AREA OF TENSION IN THE TOP FLANGE. THE BOTTOM FLANGE IN THESE AREAS IS IN COMPRESSION.

(C) DENOTES AREA OF COMPRESSION IN THE TOP FLANGE. THE BOTTOM FLANGE IN THESE AREAS IS IN TENSION.

* DIMENSION SHOWN IS THE PRECUT LENGTH. SEE NOTE 2.

NOTES:

1. WELD ATTACHMENT OF SUPPORTS FOR CONCRETE DECK FINISHING MACHINE TO AREAS OF THE FASCIA STRINGER FLANGES DESIGNATED "COMPRESSION". DO NOT WELD ATTACHMENTS TO AREAS DESIGNATED "TENSION". FILLET WELDS TO COMPRESSION FLANGES SHALL BE AT LEAST 1" FROM EDGE OF FLANGE, BE NO MORE THAN 2" LONG, AND BE AT LEAST 1/4" FOR THICKNESS UP TO 3/4" OR 5/16" FOR GREATER THAN 3/4" THICK.

2. EXISTING BACKWALLS ARE BOWED. BEAM ENDS TO BE TRIMMED TO PROVIDE A GAP FOR EXPANSION AND CONTRACTION TO ALLOW FOR PROPER OPERATION BY TORCH METHOD. THE EXISTING PAINT SYSTEM SHALL BE REPAIRED USING COLD GALVANIZED PAINT. A FUTURE PROJECT WILL REPAIR OR REPLACE THE STRUCTURAL STEEL.

NO.	REVISIONS	DATE
	RECORD DRAWINGS	08-09-13

DESIGN AGENCY: WALSH CONSTRUCTION / HNTB

CLEVELAND'S INNERBELT BRIDGE — OHIO DEPARTMENT OF TRANSPORTATION

BRIDGES 10 & 11

GIRDER ELEVATION - 1

BRIDGE NO. CUY-77-1597 L AND CUY-90-1651 L
I-90WB AND I-77SB RAMP OVER E 14TH STREET

DESIGNED JTW | DRAWN JTW | REVIEWED JOL | DATE 03-11-11
CHECKED NJ | CHECKED NJ | STRUCTURE FILE NUMBER 1807919/1807900

CUY-90-14.90
PID No. 77332/85531

21/38

090_1651LSD002.dgn 1/8/2016 11:33:35 AM rstriegel

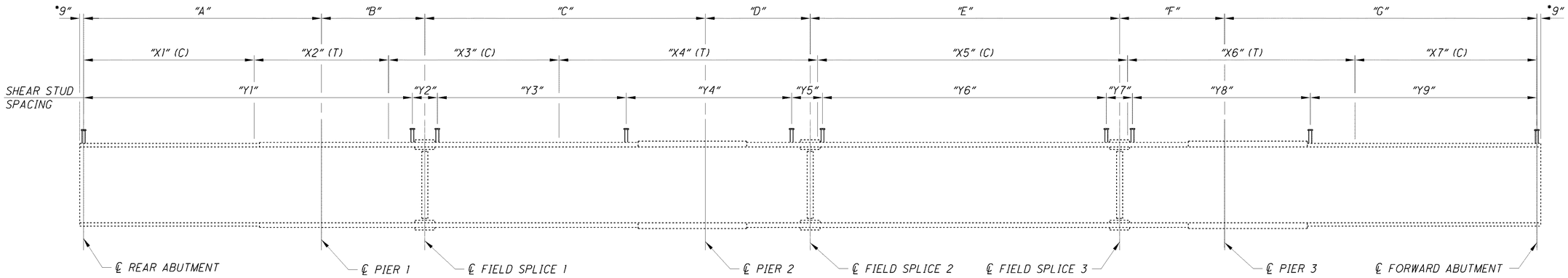

GIRDER ELEVATION

(CUY-77-1597L)

TABLE OF DIMENSIONS														
	"A"	"B"	"C"	"D"	"E"	"F"	"G"	"X1"	"X2"	"X3"	"X4"	"X5"	"X6"	"X7"
GIRDER A	46'-0 1/4"±	20'-0 1/8"±	53'-0 1/16"±	20'-3 9/16"±	59'-10 3/8"±	20'-3 9/16"±	60'-7 1/2"±	33'-0"	26'-0"	32'-9"	48'-0"	62'-0"	44'-0"	34'-4 1/2"
GIRDER B	46'-0 1/4"±	20'-0 1/8"±	54'-3 1/4"±	20'-3 9/16"±	59'-10 3/8"±	20'-3 9/16"±	60'-5 1/4"±	33'-0"	26'-0"	33'-6"	48'-0"	62'-0"	44'-0"	34'-8"
GIRDER C	46'-0 1/4"±	20'-0 1/8"±	55'-6 3/8"	20'-3 9/16""±	59'-10 3/8"±	20'-3 9/16"±	60'-3 11/16"±	33'-0"	26'-0"	34'-3"	48'-0"	62'-0"	44'-0"	35'-0 5/8"
GIRDER D	46'-0 1/4"±	20'-0 1/8"±	56'-9 5/8"±	20'-3 9/16"±	59'-10 3/8"±	20'-3 9/16"±	60'-0 3/4"±	33'-0"	26'-0"	35'-2"	49'-0"	62'-0"	43'-0"	35'-2 1/4"
GIRDER E	46'-0 1/4"±	20'-0 1/8"±	58'-0 13/16"±	20'-3 9/16"±	59'-10 3/8"±	20'-0"±	60'-0"±	33'-0"	26'-0"	36'-0"	49'-0"	62'-0"	43'-0"	35'-3"

SHEAR STUD SPACING									
	"Y1"	"Y2"	"Y3"	"Y4"	"Y5"	"Y6"	"Y7"	"Y8"	"Y9"
GIRDER A	86 SPA. @ 9" = 64'-6"	3'-0"	44 SPA. @ 9" = 33'-0"	18 SPA. @ 24" = 36'-0"	4'-6"	75 SPA. @ 9" = 56'-3"	4'-4 1/2"	16 SPA. @ 24" = 32'-0"	62 SPA. @ 9" = 46'-6"
GIRDER B	85 SPA. @ 9" = 63'-9"	4'-6"	45 SPA. @ 9" = 33'-9"	18 SPA. @ 24" = 36'-0"	4'-9"	74 SPA. @ 9" = 55'-6"	5'-2 3/8"	16 SPA. @ 24" = 32'-0"	61 SPA. @ 9" = 45'-9"
GIRDER C	85 SPA. @ 9" = 63'-9"	4'-3"	47 SPA. @ 9" = 35'-3"	18 SPA. @ 24" = 36'-0"	4'-9"	74 SPA. @ 9" = 55'-6"	5'-0 7/8"	16 SPA. @ 24" = 32'-0"	61 SPA. @ 9" = 45'-9"
GIRDER D	85 SPA. @ 9" = 63'-9"	4'-3"	49 SPA. @ 9" = 36'-9"	18 SPA. @ 24" = 36'-0"	4'-9"	73 SPA. @ 9" = 54'-9"	5'-4 1/4"	16 SPA. @ 24" = 32'-0"	61 SPA. @ 9" = 45'-9"
GIRDER E	86 SPA. @ 9" = 64'-6"	3'-0"	49 SPA. @ 9" = 36'-9"	19 SPA. @ 24" = 38'-0"	4'-0"	75 SPA. @ 9" = 56'-3"	4'-0 1/8"	16 SPA. @ 24" = 32'-0"	61 SPA. @ 9" = 45'-9"

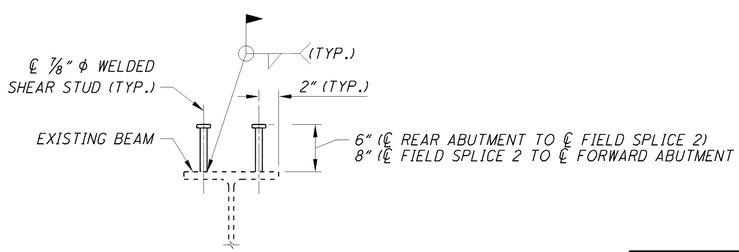

SHEAR STUD DETAIL

(SHEAR STUD PLACEMENT ON BOLTED FLANGE PLATES IS NOT PERMITTED. ADJUST SPACING AS NECESSARY TO AVOID INTERFERENCE.)

GIRDER REMOVAL LENGTH					
GIRDER LINE	A	B	C	D	E
FORWARD ABUTMENT	2 1/2"	3"	2 1/4"	3"	2"
REAR ABUTMENT	3 1/2"	3 1/2"	3 1/2"	2"	2"
SEE NOTE 2					

LEGEND:

(T) DENOTES AREA OF TENSION IN THE TOP FLANGE. THE BOTTOM FLANGE IN THESE AREAS IS IN COMPRESSION.

(C) DENOTES AREA OF COMPRESSION IN THE TOP FLANGE. THE BOTTOM FLANGE IN THESE AREAS IS IN TENSION.

* DIMENSION SHOWN IS THE PRECUT LENGTH. SEE NOTE 2.

NOTES:

1. WELD ATTACHMENT OF SUPPORTS FOR CONCRETE DECK FINISHING MACHINE TO AREAS OF THE FASCIA STRINGER FLANGES DESIGNATED "COMPRESSION". DO NOT WELD ATTACHMENTS TO AREAS DESIGNATED "TENSION". FILLET WELDS TO COMPRESSION FLANGES SHALL BE AT LEAST 1" FROM EDGE OF FLANGE, BE NO MORE THAN 2" LONG, AND BE AT LEAST 1/4" FOR THICKNESS UP TO 3/4" OR 5/16" FOR GREATER THAN 3/4" THICK.

2. EXISTING BACKWALLS ARE BOWED. BEAM ENDS TO BE TRIMMED TO PROVIDE A GAP FOR EXPANSION AND CONTRACTION TO ALLOW FOR PROPER OPERATION BY TORCH METHOD. THE EXISTING PAINT SYSTEM SHALL BE REPAIRED USING COLD GALVANIZED PAINT. A FUTURE PROJECT WILL REPAIR OR REPLACE THE STRUCTURAL STEEL.

NO.	REVISIONS	DATE
	RECORD DRAWINGS	08-09-13

DESIGN AGENCY: WALSH CONSTRUCTION / HNTB

CLEVELAND'S INNERBELT BRIDGE — THE CONSTRUCTION OF TRANSFORMATION

BRIDGES 10 & 11

GIRDER ELEVATION - 2

BRIDGE NO. CUY-77-1597 L AND CUY-90-1651 L
I-90WB AND I-77SB RAMP OVER E 14TH STREET

DESIGNED JTW | DRAWN JTW | REVIEWED JOL | DATE 03-11-11
CHECKED NJ | CHECKED NJ | STRUCTURE FILE NUMBER 1807919/1807900

CUY-90-14.90
PID No. 77332/85531

22/38

090_1651LSD003.dgn 1/8/2016 11:33:41 AM rstriegel

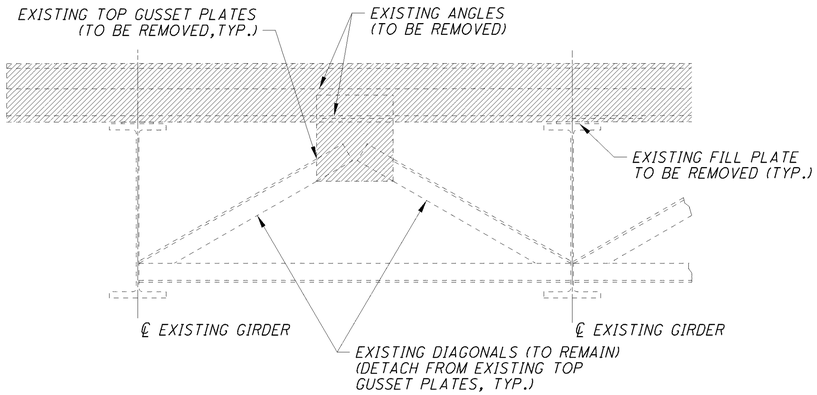

END CROSSFRAME REMOVAL @ CUY-77-1597L FORWARD ABUTMENT, CUY-90-1651L REAR AND FORWARD ABUTMENT

(SEE NOTE 1)
(NOT TO SCALE)
(SHOWN LOOKING AT DECK)

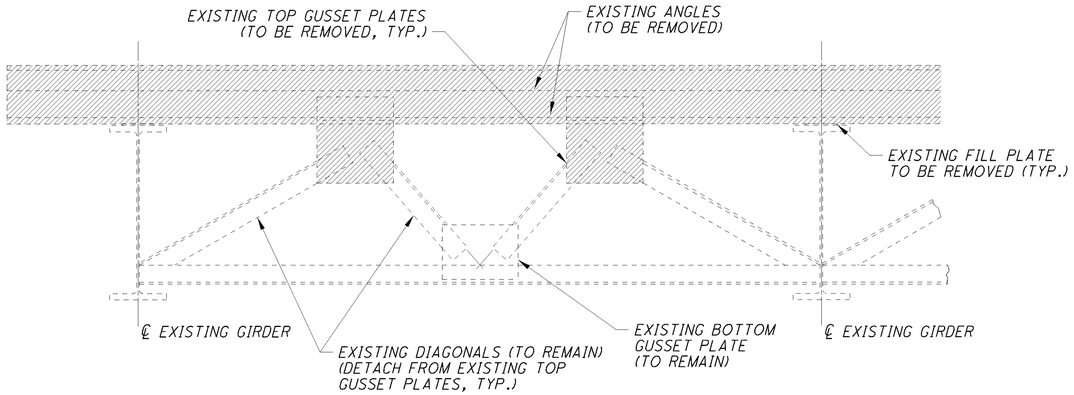

END CROSSFRAME REMOVAL @ CUY-77-1597L REAR ABUTMENT

(SEE NOTE 1)
(NOT TO SCALE)
(SHOWN LOOKING AT DECK)

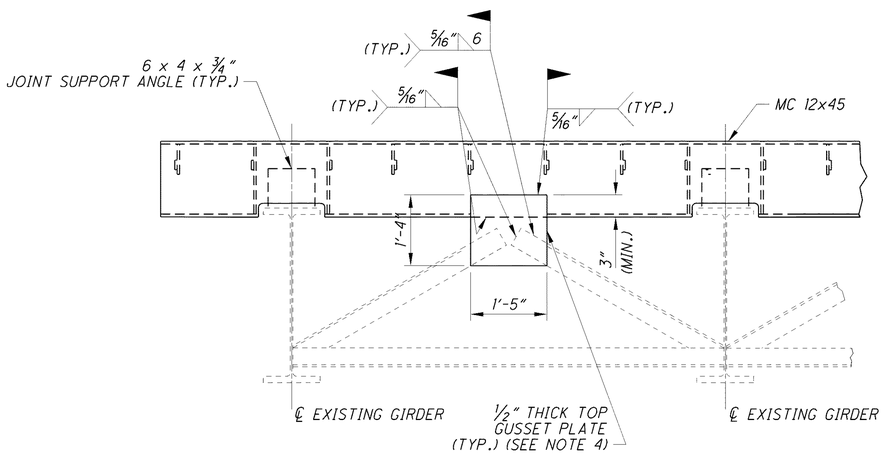

END CROSSFRAME RETROFIT @ CUY-77-1597L FORWARD ABUTMENT, CUY-90-1651L REAR AND FORWARD ABUTMENT

(SEE NOTE 1)
(NOT TO SCALE)
(SHOWN LOOKING AT DECK)

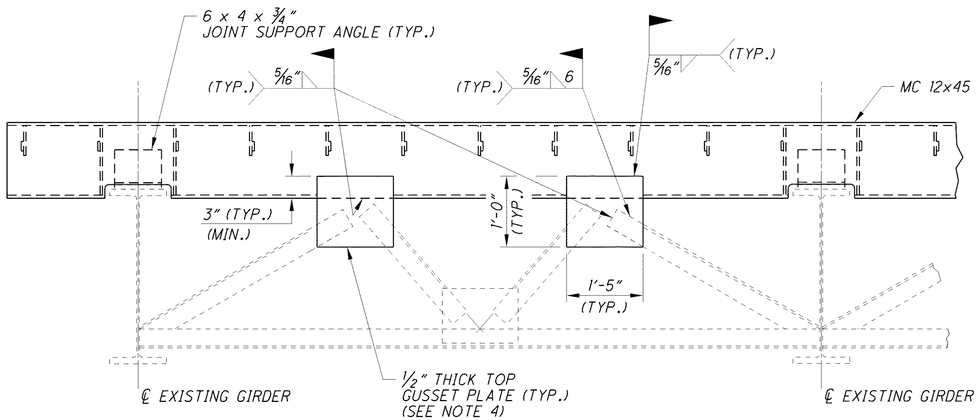

END CROSSFRAME RETROFIT @ CUY-77-1597L REAR ABUTMENT

(SEE NOTE 1)
(NOT TO SCALE)
(SHOWN LOOKING AT DECK)

NOTE:

1. DEPICTION OF THE EXISTING END CROSSFRAMES SHALL BE CONSIDERED REPRESENTATIVE OF THE ACTUAL END CROSSFRAMES.
2. FOR JOINT SUPPORT ANGLE, MC12x45, PLATE CONNECTION DETAILS AND ADDITIONAL DETAILS FOR PROPOSED END CROSSFRAME RETROFIT, REFER TO ODOT STANDARD DRAWING EXJ-4-87.
3. FOR ADDITIONAL EXPANSION JOINT DETAILS, SEE SHEETS 35/38 AND 36/38 .
4. IF PROPOSED PHASE CONSTRUCTION SPLICE IN THE MC 12x45 JOINT ARMOR COINCIDES WITH A PROPOSED GUSSET PLATE ATTACHMENT LOCATION, COMPLETE WELDED SPLICE OF MC 12x45 PRIOR TO WELDING ATTACHMENT OF GUSSET PLATE.
5. SEE ODOT STANDARD DRAWING GSD-1-96 FOR DETAILS OTHERWISE NOT SHOWN.

NO.	REVISIONS	DATE
	RECORD DRAWINGS	03-14-11

DESIGN AGENCY: WALSH CONSTRUCTION / HNTB

CLEVELAND'S INNERBELT BRIDGE — OHIO DEPARTMENT OF TRANSPORTATION

BRIDGES 10 & 11

SUPERSTRUCTURE DETAILS

BRIDGE NO. CUY-77-1597 L AND CUY-90-1651 L
I-90WB AND I-77SB RAMP OVER E 14TH STREET

DESIGNED	DRAWN	REVIEWED	DATE
BTA	RSB	JOL	03-11-11
CHECKED	CHECKED	STRUCTURE FILE NUMBER	
NJ	NJ	1807919/1807900	

CUY-90-14.90
PID No. 77332/85531

23/38

090_1651LSD004.dgn 1/8/2016 11:33:48 AM rstriegel

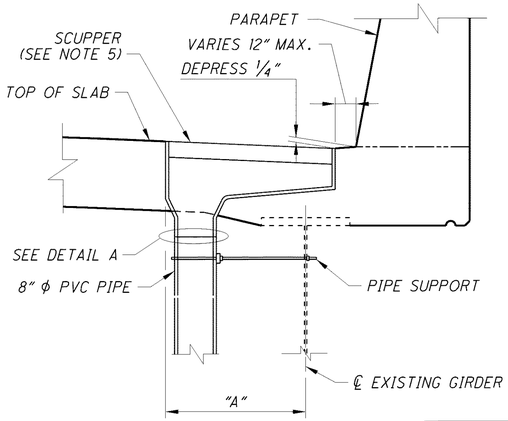

TYPICAL SCUPPER ELEVATION

DIMENSION "A" TABLE	
LOCATION	"A"
GIRDER A	2'-4"
GIRDER E	1'-10"
GIRDER F	1'-6"

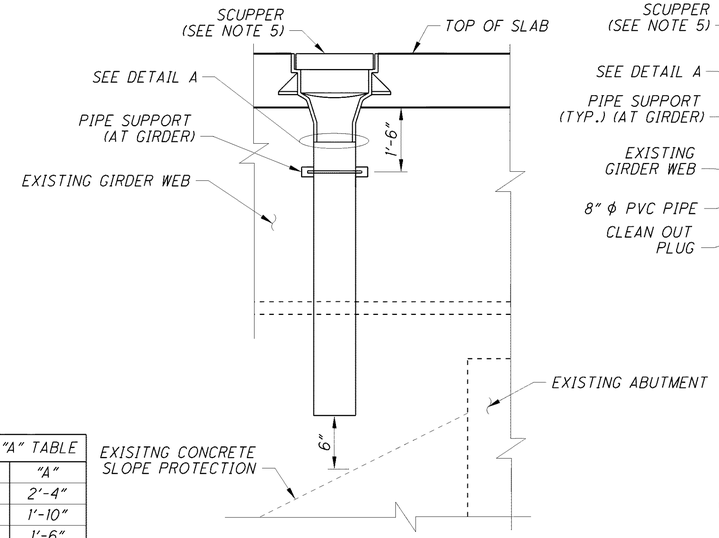

DRAINAGE PIPE AT ABUTMENT DETAIL

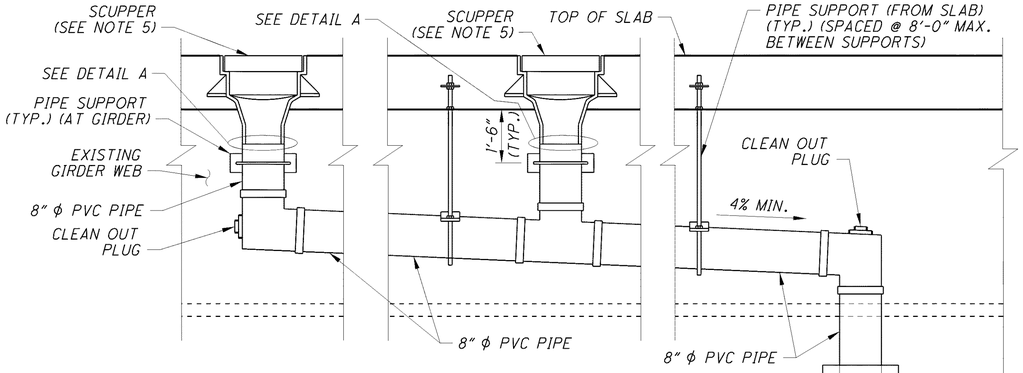

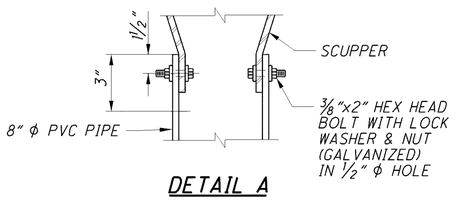

DETAIL A

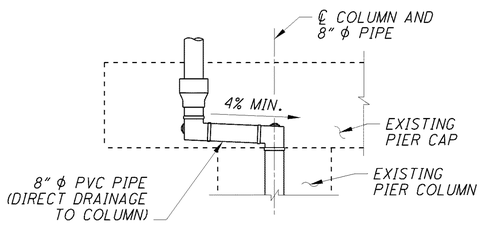

PARTIAL PIER ELEVATION

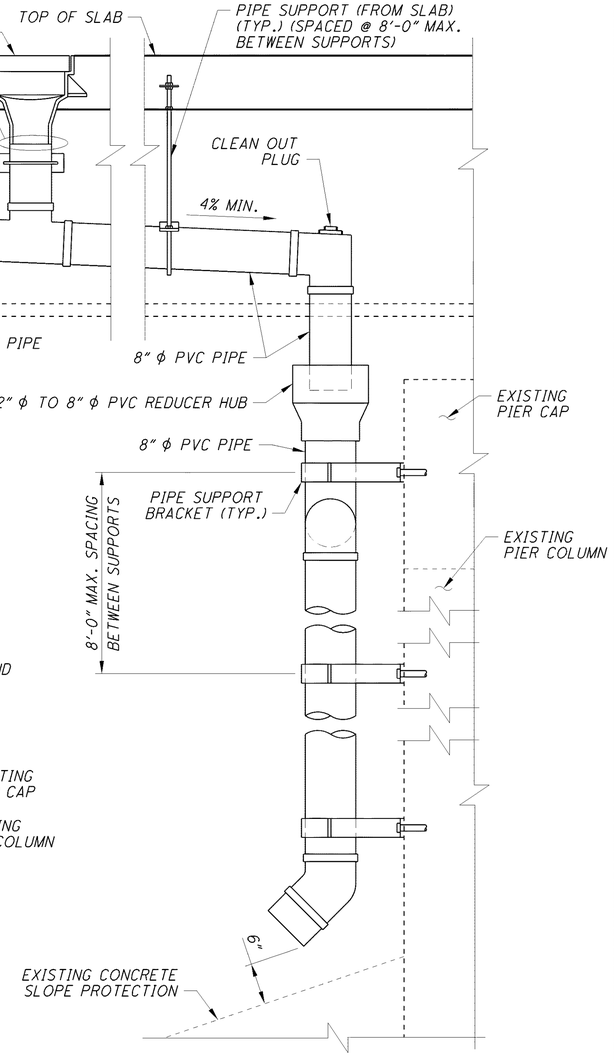

DRAINAGE PIPE AT PIER DETAIL

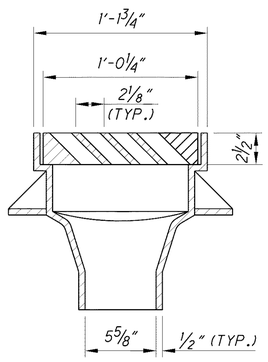

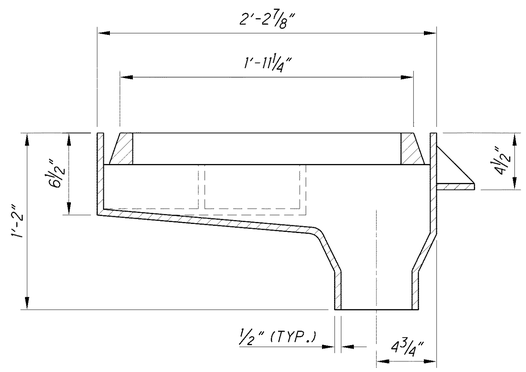

SCUPPER DETAILS

(SEE NOTE 5)

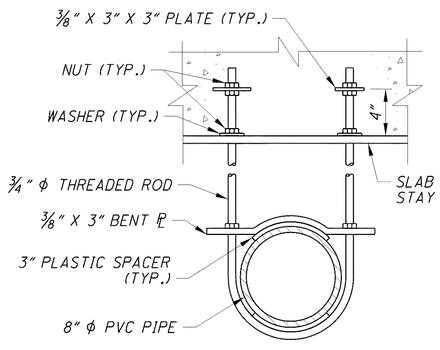

PIPE SUPPORT FROM SLAB

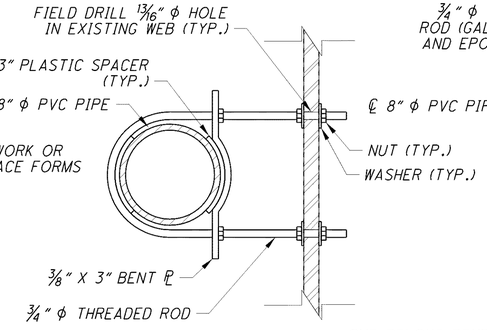

PIPE SUPPORT AT GIRDER

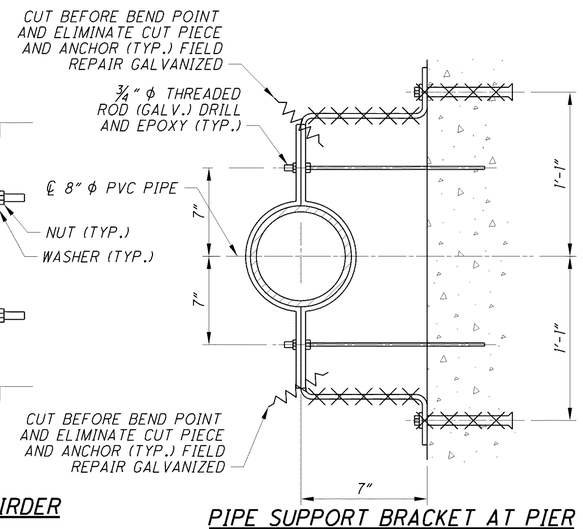

PIPE SUPPORT BRACKET AT PIER

(FIELD BEND BRACKET RADIAL TO FIT CURVE OF PIER COLUMN)

NOTES:

1. FOR SCUPPER LOCATIONS, SEE SHEET 20/38.
2. ADJUST THE TOP OF SCUPPER INLET TO MATCH THE CROSS SLOPE OF THE SLAB.
3. ALL MATERIALS FOR THE SUPPORT HANGERS AND BRACKETS SHALL BE ASTM A709 GRADE 36 AND GALVANIZED PER CMS 711.02.
4. POLYVINYL-CHLORIDE (PVC) PIPE USED IN BRIDGE DRAINS SHALL CONFORM TO CMS 707.45.
5. SCUPPER SHALL BE A NEENAH FOUNDRY MODEL NUMBER R-3922. BOLTS FOR SCUPPER GRATE SHALL BE STAINLESS STEEL.

NO.	REVISIONS	DATE
	RECORD DRAWINGS	01-29-13

DESIGN AGENCY: WALSH HNTB (WALSH CONSTRUCTION)

CLEVELAND'S TUNNELBELT BRIDGE 50 — OHIO DEPARTMENT OF TRANSPORTATION

BRIDGES 10 & 11

DRAINAGE DETAILS

BRIDGE NO. CUY-77-1597 L AND CUY-90-1651 L
I-90WB AND I-77SB RAMP OVER E 14TH STREET

DESIGNED	DRAWN	REVIEWED	DATE
JTW	JTW	JOL	03-11-11
CHECKED	CHECKED	STRUCTURE FILE NUMBER	
RSB	RSB	1807919/1807900	

CUY-90-14.90
PID No. 77332/85531

24/38

090_1651L SD005.dgn 1/8/2016 11:33:58 AM rstriegel

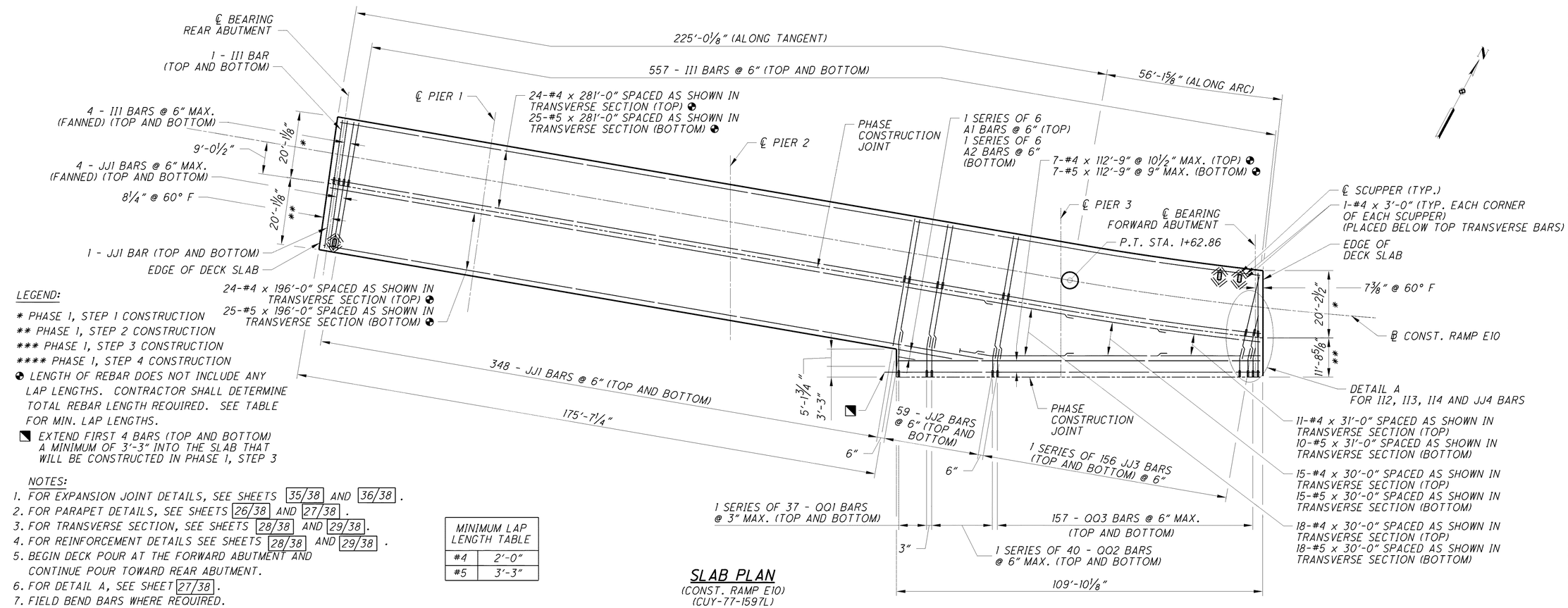

LEGEND:

* PHASE 1, STEP 1 CONSTRUCTION
** PHASE 1, STEP 2 CONSTRUCTION
*** PHASE 1, STEP 3 CONSTRUCTION
**** PHASE 1, STEP 4 CONSTRUCTION
◆ LENGTH OF REBAR DOES NOT INCLUDE ANY LAP LENGTHS. CONTRACTOR SHALL DETERMINE TOTAL REBAR LENGTH REQUIRED. SEE TABLE FOR MIN. LAP LENGTHS.
◥ EXTEND FIRST 4 BARS (TOP AND BOTTOM) A MINIMUM OF 3'-3" INTO THE SLAB THAT WILL BE CONSTRUCTED IN PHASE 1, STEP 3

NOTES:

1. FOR EXPANSION JOINT DETAILS, SEE SHEETS 35/38 AND 36/38 .
2. FOR PARAPET DETAILS, SEE SHEETS 26/38 AND 27/38 .
3. FOR TRANSVERSE SECTION, SEE SHEETS 28/38 AND 29/38 .
4. FOR REINFORCEMENT DETAILS SEE SHEETS 28/38 AND 29/38 .
5. BEGIN DECK POUR AT THE FORWARD ABUTMENT AND CONTINUE POUR TOWARD REAR ABUTMENT.
6. FOR DETAIL A, SEE SHEET 27/38 .
7. FIELD BEND BARS WHERE REQUIRED.
8. FOR DEEP HAUNCH DETAIL, SEE SHEET 29/38 .

MINIMUM LAP LENGTH TABLE	
#4	2'-0"
#5	3'-3"

SLAB PLAN

(CONST. RAMP E10)
(CUY-77-1597L)

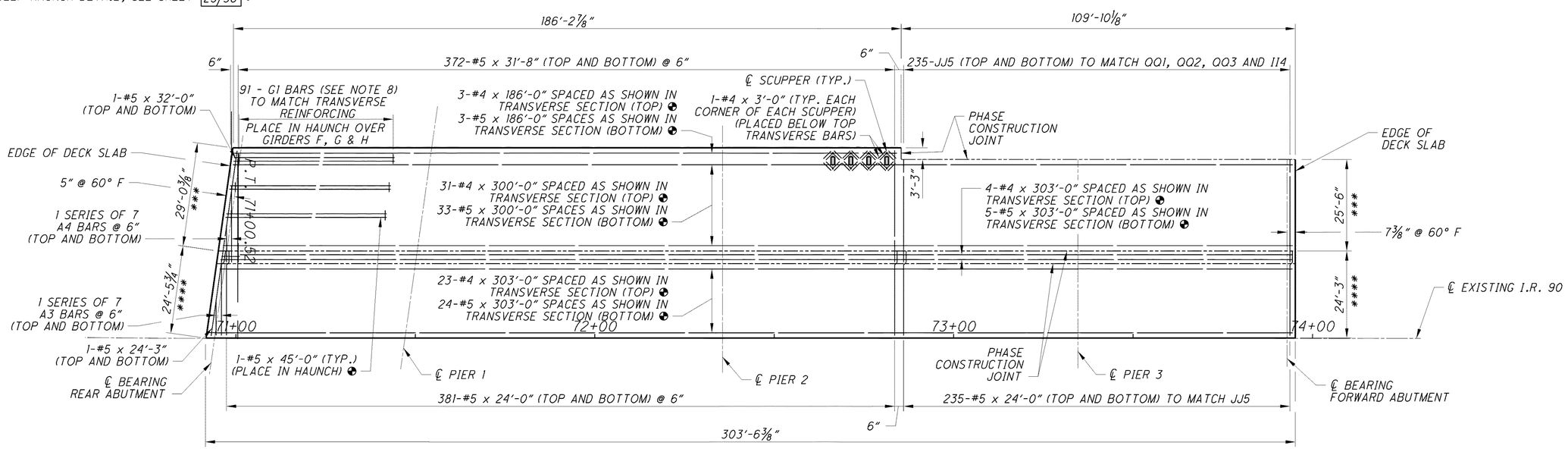

SLAB PLAN

(MAINLINE I.R. 90WB)
(CUY-90-1651L)

NO.	REVISIONS	DATE
	RECORD DRAWINGS	03-14-11

DESIGN AGENCY: WALSH CONSTRUCTION — HNTB

CLEVELAND'S TUNNEL BELT BRIDGE — OHIO DEPARTMENT OF TRANSPORTATION

BRIDGES 10 & 11

SLAB PLAN

BRIDGE NO. CUY-77-1597 L AND CUY-90-1651 L
I-90WB AND I-77SB RAMP OVER E 14TH STREET

DESIGNED	DRAWN	REVIEWED	DATE
RSB	RSB	JOL	03-11-11
CHECKED	CHECKED	STRUCTURE FILE NUMBER	
JTW	NJ	1807919/1807900	

CUY-90-14.90
PID No. 77332/85531

090_1651LDP001.dgn 1/8/2016 11:34:04 AM rstriegel

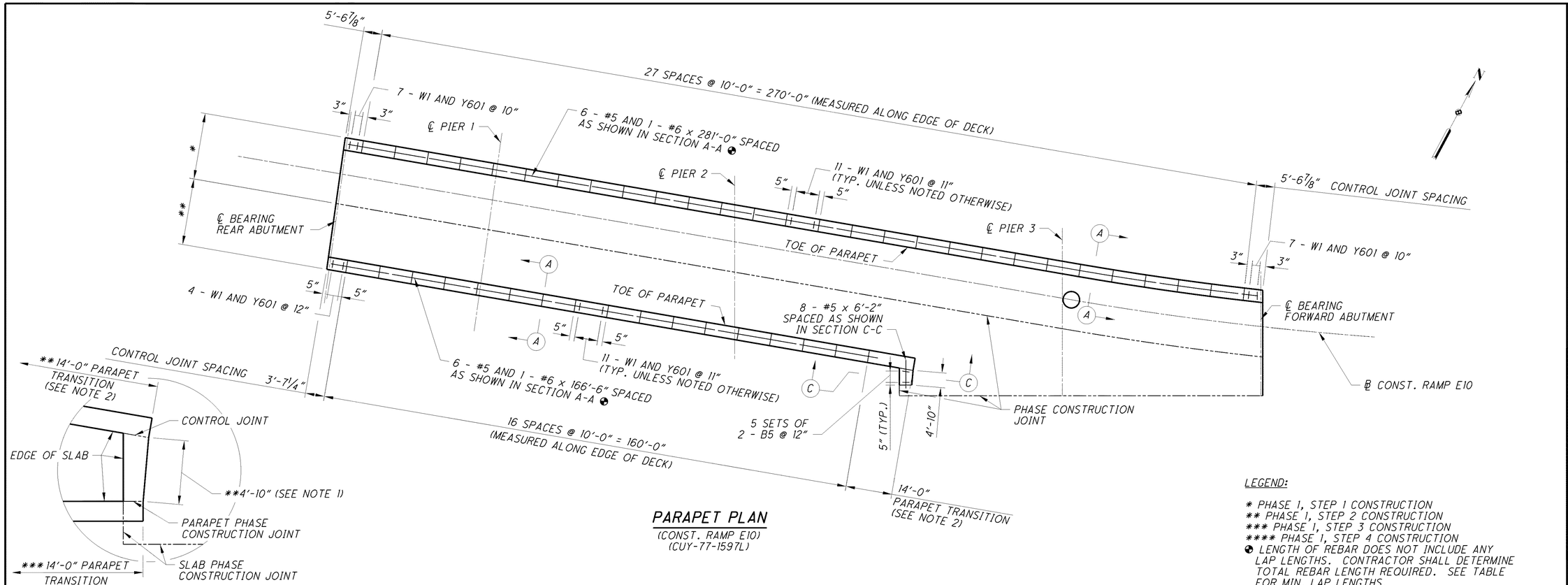

PARAPET PLAN

(CONST. RAMP E10)
(CUY-77-1597L)

DETAIL 1

LEGEND:

* PHASE 1, STEP 1 CONSTRUCTION
** PHASE 1, STEP 2 CONSTRUCTION
*** PHASE 1, STEP 3 CONSTRUCTION
**** PHASE 1, STEP 4 CONSTRUCTION
◕ LENGTH OF REBAR DOES NOT INCLUDE ANY LAP LENGTHS. CONTRACTOR SHALL DETERMINE TOTAL REBAR LENGTH REQUIRED. SEE TABLE FOR MIN. LAP LENGTHS.

NOTES:

1. FOR SECTIONS A-A, B-B AND C-C SEE SHEET 27/38.
2. FOR ADDITIONAL PARAPET DETAILS SEE SHEETS 27/38 AND 38/38 AND ODOT STANDARD SBR-1-99.

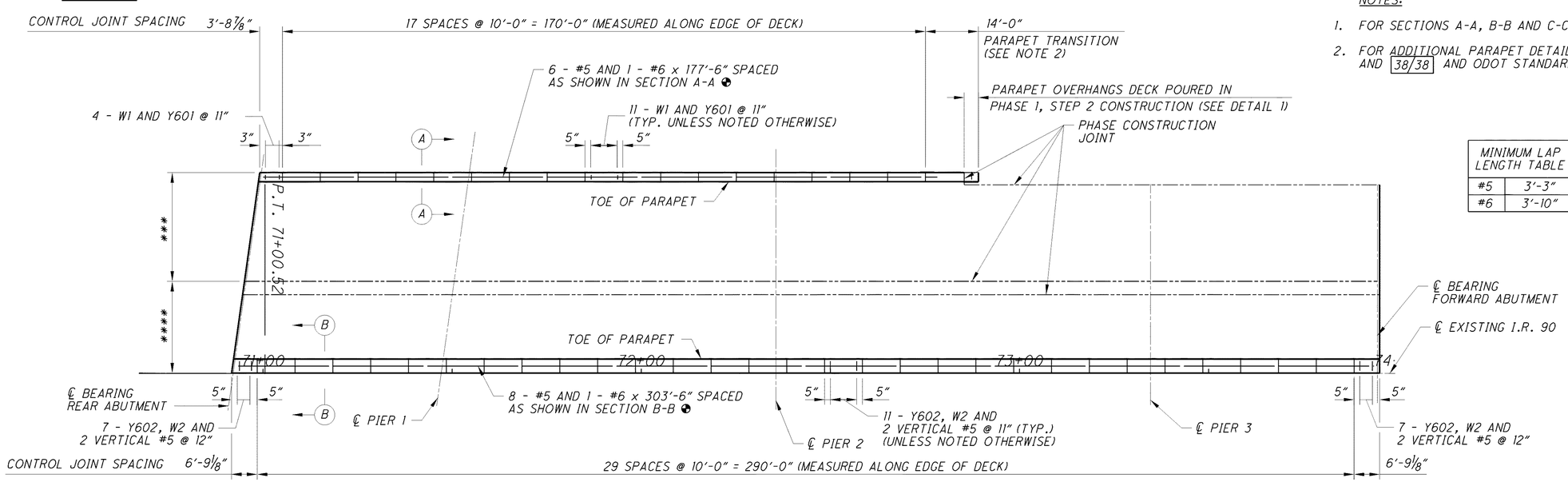

MINIMUM LAP LENGTH TABLE	
#5	3'-3"
#6	3'-10"

PARAPET PLAN

(MAINLINE I.R. 90WB)
(CUY-90-1651L)

NO.	REVISIONS	DATE
	RECORD DRAWINGS	08-09-13

DESIGN AGENCY: WALSH CONSTRUCTION HNTB

CLEVELAND'S INNERBELT BRIDGE 90 — OHIO DEPARTMENT OF TRANSPORTATION

PARAPET PLAN

BRIDGE NO. CUY-77-1597 L AND CUY-90-1651 L
I-90WB AND I-77SB RAMP OVER E 14TH STREET

DESIGNED	DRAWN	REVIEWED	DATE
RSB	RSB	JOL	03-11-11
CHECKED	CHECKED	STRUCTURE FILE NUMBER	
NJ	NJ	1807919/1807900	

CUY-90-14.90
PID No. 77332/85531

26/38

26/38

090_1651L-SD006.dgn 1/8/2016 11:34:11 AM rstriegel

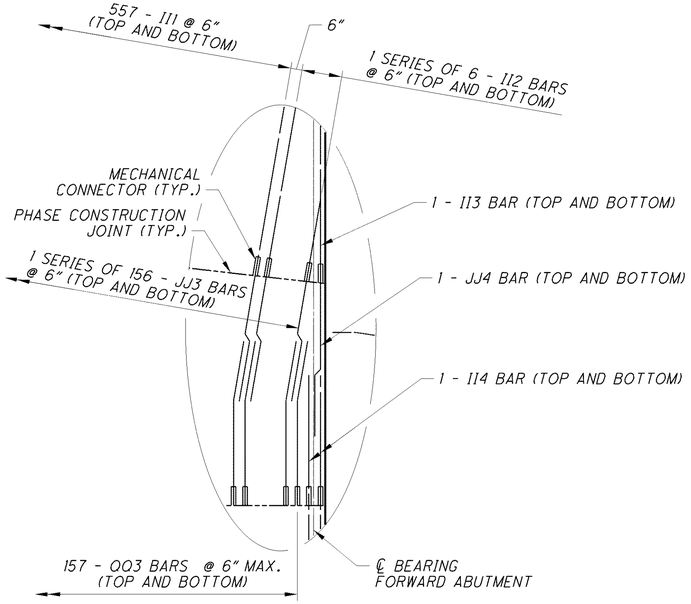

DETAIL A

(LONGITUDINAL BARS NOT SHOWN FOR CLARITY)

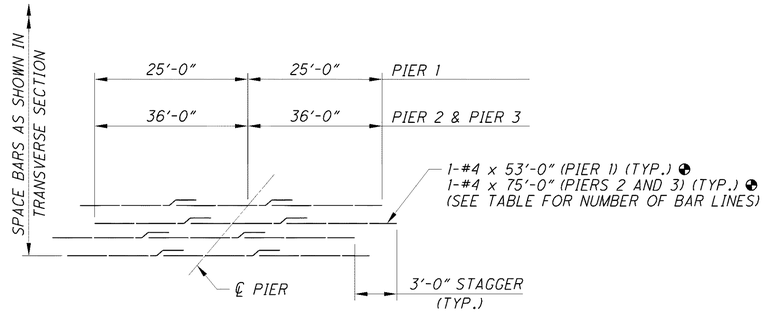

ADDITIONAL REINFORCING OVER THE PIERS

NO. OF ADDITIONAL REINFORCING BARS LINES			
	PIER 1	PIER 2	PIER 3
PHASE 1, STEP 1	43	43	43
PHASE 1, STEP 2	43	43	46
PHASE 1, STEP 3	66	66	60
PHASE 1, STEP 4	50	50	50

◐ LENGTH OF REBAR DOES NOT INCLUDE ANY LAP LENGTHS. CONTRACTOR SHALL DETERMINE TOTAL REBAR LENGTH REQUIRED. SEE TABLE FOR MIN. LAP LENGTHS.

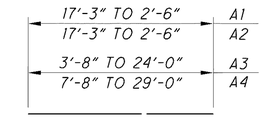

BARS A1 - #4
BAR A2, A3 AND A4 - #5

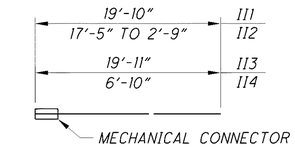

BARS I11, I12, I13 AND I14 - #5

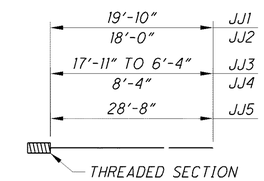

BARS JJ1, JJ2, JJ3, JJ4 AND JJ5 - #5

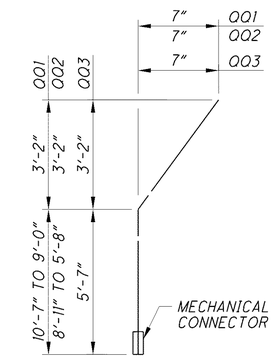

BARS OO1, OO2 AND OO3 - #5

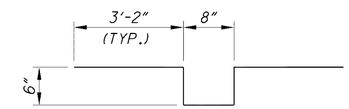

BAR G1 - #5

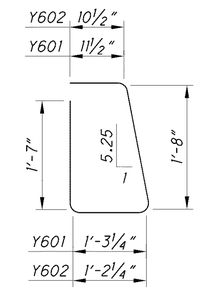

BAR Y601 AND Y602 - #6

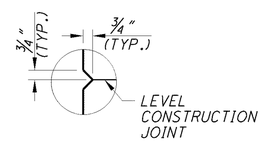

DETAIL 2

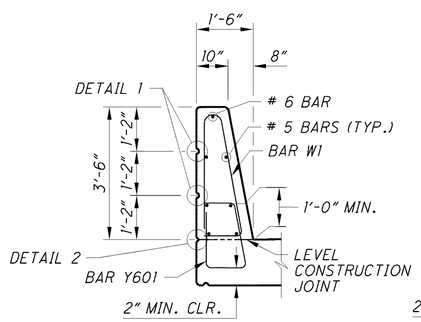

SECTION A-A

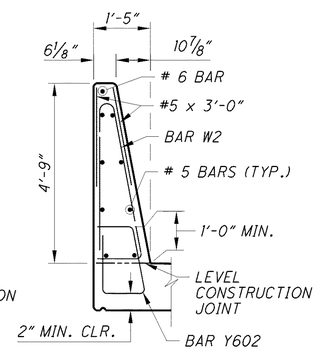

SECTION B-B

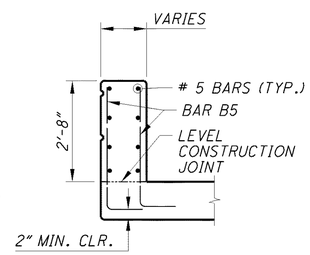

SECTION C-C

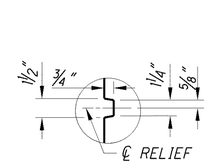

DETAIL 1

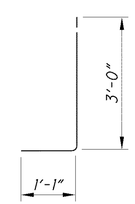

BAR B5- #6

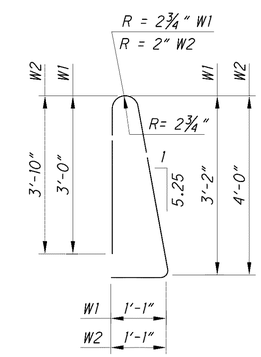

BAR W1 AND W2 - #5

SLAB OVERHANG *																	
	SPAN 1					SPAN 2				SPAN 3				SPAN 4			
	℄ BEARING REAR ABUTMENT	0.25	0.5	0.75	℄ PIER 1	0.25	0.5	0.75	℄ PIER 2	0.25	0.5	0.75	℄ PIER 3	0.25	0.5	0.75	℄ BEARING FORWARD ABUTMENT
STATION AT ℄ GIRDER A	3+86.67	3+75.16	3+63.65	3+52.15	3+40.64	3+22.38	3+04.13	2+85.88	2+67.62	2+42.51	2+17.39	1+92.28	1+67.17	1+52.01	1+36.53	1+21.37	1+06.01
LEFT SLAB OVERHANG	2'-2"	2'-2"	2'-2"	2'-2"	2'-2"	2'-2"	2'-2"	2'-2"	2'-2"	2'-2"	2'-2"	2'-2"	2'-2"	2'-2¾"	1'-11⅜"	1'-11⅜"	2'-1⅞"
STATION AT ℄ GIRDER E	3+85.56	3+74.05	3+62.54	3+51.04	3+39.53	3+20.01	3+00.49	2+80.97	2+61.45	2+36.41	—	—	—	—	—	—	—
RIGHT SLAB OVERHANG	2'-2"	2'-2"	2'-2"	2'-2"	2'-2"	2'-2"	2'-2"	2'-2"	2'-2"	2'-2"	—	—	—	—	—	—	—
STATION AT ℄ GIRDER F	70+99.10	71+12.85	71+26.60	71+40.35	71+54.10	71+74.47	71+94.85	72+15.22	72+35.60	72+60.35	—	—	—	—	—	—	—
LEFT SLAB OVERHANG	3'-3"	3'-3"	3'-3"	3'-3"	3'-3"	3'-3"	3'-3"	3'-3"	3'-3"	3'-3"	—	—	—	—	—	—	—
STATION AT ℄ GIRDER M	70+92.49	71+06.24	71+19.99	71+33.74	71+47.49	71+69.52	71+91.54	72+13.57	72+35.60	72+60.35	72+85.10	73+09.85	73+34.60	73+49.60	73+64.60	73+79.60	73+94.60
RIGHT SLAB OVERHANG	2'-8⅞"	2'-9"	2'-9"	2'-9"	2'-9"	2'-9"	2'-9"	2'-9"	2'-9"	2'-9"	2'-9"	2'-9"	2'-9"	2'-9"	2'-9"	2'-9"	2'-9"

* SLAB OVERHANG DIMENSIONS ARE MEASURED NORMAL TO THE ℄ GIRDER.

NOTES:

1. FOR ADDITIONAL NOTES SEE SHEET 25/38.
2. FOR LOCATIONS OF SECTION A-A, B-B AND C-C, SEE SHEET 26/38.
3. FOR LOCATION OF DETAIL A, SEE SHEET 25/38.

MINIMUM LAP LENGTH TABLE	
#4	2'-0"
#5	3'-3"

NO.	REVISIONS	DATE
	RECORD DRAWINGS	08-09-13

DESIGN AGENCY: WALSH HNTB (WALSH CONSTRUCTION)

CLEVELAND'S INNERBELT BRIDGE — OHIO DEPARTMENT OF TRANSPORTATION

BRIDGES 10 & 11

SLAB AND PARAPET DETAILS

BRIDGE NO. CUY-77-1597 L AND CUY-90-1651 L
I-90WB AND I-77SB RAMP OVER E 14TH STREET

DESIGNED RSB | CHECKED JTW | DRAWN RSB | CHECKED NJ | REVIEWED JOL | DATE 03-11-11 | STRUCTURE FILE NUMBER 1807919/1807900

CUY-90-14.90
PID No. 77332/85531

090_1651LSD007.dgn 1/8/2016 11:34:17 AM rstriegel

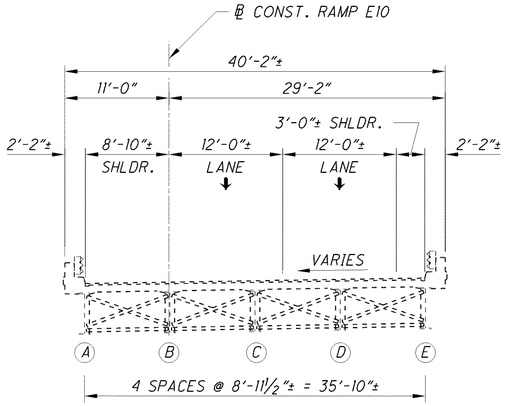

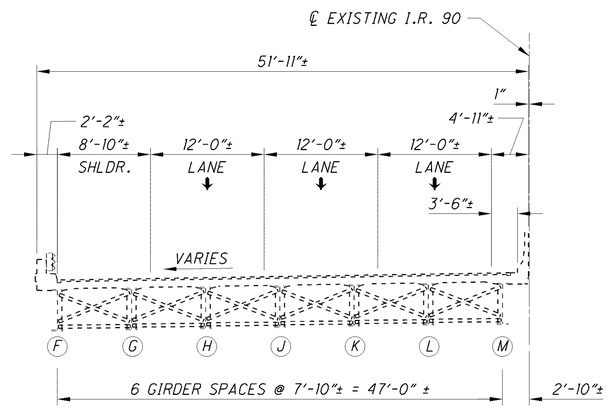

EXISTING TYPICAL TRANSVERSE SECTION

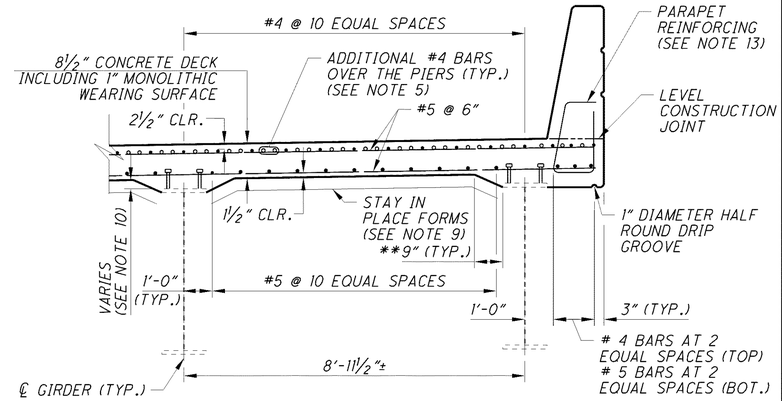

TYPICAL DECK SLAB AND OVERHANG

(CONST. RAMP E10)
(SEE NOTE 11)
(RIGHT OVERHANG SHOWN, LEFT OVERHANG SIMILAR)

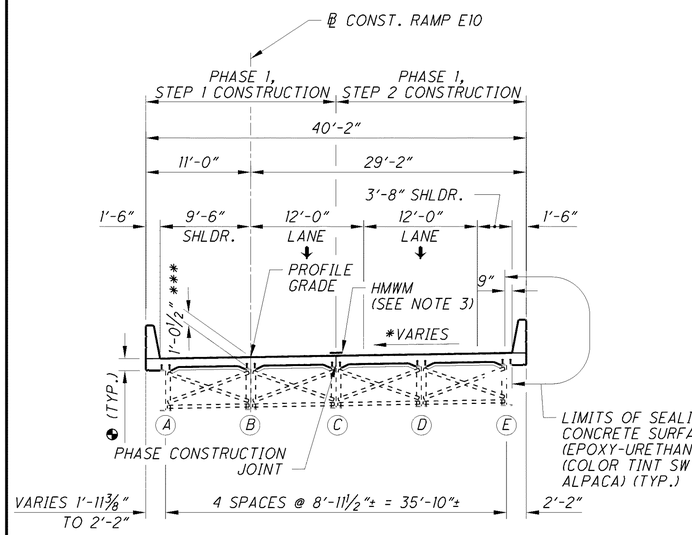

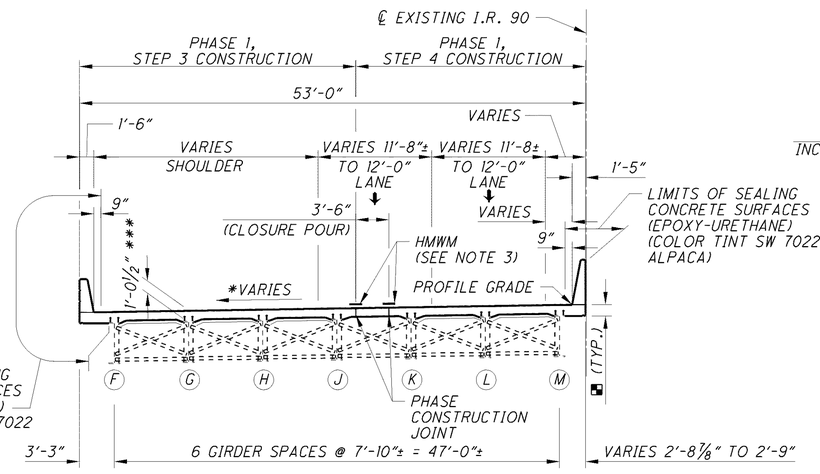

TYPICAL TRANSVERSE SECTION

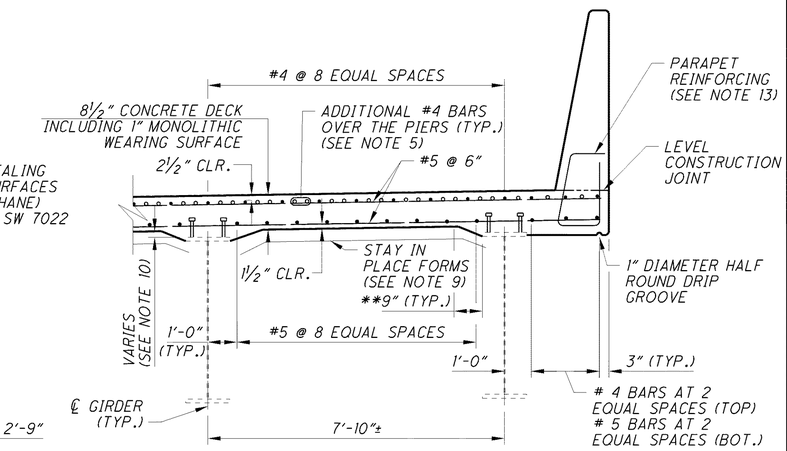

TYPICAL DECK SLAB AND OVERHANG

(I.R. 90 WB)
(SEE NOTE 11)
(RIGHT OVERHANG SHOWN, LEFT OVERHANG SIMILAR)

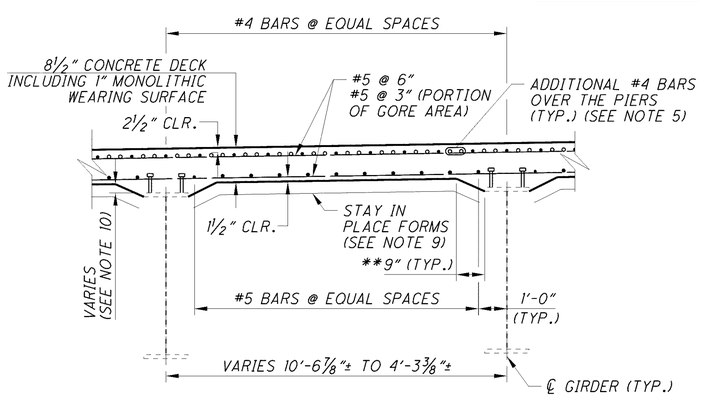

MISCELLANEOUS DECK SLAB

(CONST. RAMP E10)
(SPAN 3 BETWEEN GIRDERS C & E NEAR PIER 3)
(SPAN 3 GORE AREA, NO ADDITIONAL #4 BARS PLACED IN AREA OF 6" SPACED LONGITUDINAL BARS)
(SPAN 4 BETWEEN ALL GIRDERS)

DECK FASCIA THICKNESS TABLE (CUY-77-1597 L) ◆		
OVERHANG	MINIMUM	MAXIMUM
LEFT	11⅛"	1'-2⅜"
RIGHT	10⅝"	1'-2¼"

DECK FASCIA THICKNESS TABLE (CUY-90-1651 L) ◆		
OVERHANG	MINIMUM	MAXIMUM
LEFT	11⅝"	1'-3⅜"
RIGHT	1'-0½"	1'-1¾"

DECK CONCRETE QUANTITY TABLE (CUY-77-1597 L)	
	VOLUME (CU. YD.)
PHASE 1, STEP 1	218
PHASE 1, STEP 2	196

DECK CONCRETE QUANTITY TABLE (CUY-77-1597 L)	
	VOLUME (CU. YD.)
PHASE 1, STEP 3	267
PHASE 1, STEP 4	274

* REFER TO SCREED ELEVATION TABLES AND SUPER ELEVATION TRANSITION DIAGRAMS FOR MORE DETAILS. (SEE NOTES 7 & 8)

** ACTUAL HAUNCH DIMENSION VARIES PER STAY IN PLACE FORM MANUFACTURER

*** MEASURED TO TOP OF EXISTING WEB, ACTUAL THICKNESS WILL VARY

NOTES:

1. FOR PHASE CONSTRUCTION DETAILS, SEE SHEETS 6/38 THRU 11/38 .
2. INTERMEDIATE CROSSFRAMES SHALL NOT BE PERMANENTLY ATTACHED IN THE SPECIFIED BAY UNTIL THE CONCRETE POURS ON BOTH SIDES OF THE PHASE CONSTRUCTION JOINT HAVE BEEN COMPLETED AND CURED. FOR ADDITIONAL INTERMEDIATE CROSSFRAME DETAILS, SEE SHEET 20/38 .
3. SEAL CONSTRUCTION JOINT WITH 2'-0" WIDE HIGH MOLECULAR WEIGHT METHACRYLATE (HMWM).
4. THE ESTIMATED QUANTITY OF DECK SLAB CONCRETE IS BASED ON THE CONSTANT DECK SLAB THICKNESS, AS SHOWN, PLUS THE QUANTITY OF CONCRETE THAT FORMS EACH GIRDER HAUNCH. THE ESTIMATE ASSUMES A CONSTANT HAUNCH THICKNESS OF 3 INCHES AND A CONSTANT HAUNCH WIDTH OUTSIDE THE EDGE OF EACH BEAM FLANGE OF 9 INCHES. DEVIATE FROM THIS HAUNCH THICKNESS AS NECESSARY TO PLACE THE DECK SURFACE AT FINISH GRADE. THE ALLOWABLE TOLERANCE FOR HAUNCH WIDTH OUTSIDE EDGE OF EACH BEAM IS 3 INCHES. THE DEPTH SHOWN IN THE TRANSVERSE SECTION WAS MEASURED AT THE CENTERLINE OF GIRDER FROM THE SURFACE OF DECK TO THE BOTTOM OF THE TOP FLANGE. THE AREA OF ALL EMBEDDED STEEL PLATES HAS BEEN DEDUCTED FROM THE HAUNCH QUANTITY IN ACCORDANCE WITH 511.24.
5. FOR DETAILS OF ADDITIONAL REINFORCING OVER THE PIERS, SEE SHEET 27/38 .
6. DRIP GROOVES SHALL TERMINATE 2'-0" FROM THE END OF SLAB NEAR THE ABUTMENTS.
7. FOR SCREED ELEVATION TABLES, SEE SHEETS 30/38 THRU 34/38 .
8. FOR SUPER ELEVATION TRANSITION DIAGRAMS, SEE SHEET 29/38 .
9. REMOVABLE FORMS SHALL BE PROVIDED WITHIN 5'-0" OF BOTH SIDES OF ANY EXPANSION JOINT OR SCUPPER LOCATION. FOR ADDITIONAL STAY IN PLACE FORMS NOTES, SEE SHEET 29/38 .
10. FOR HAUNCH DIMENSIONS, SEE TABLE OF HAUNCHES ON SHEET 29/38 .
11. FOR SLAB OVERHANG DIMENSIONS, SEE SHEET 27/38 .
12. FOR ADDITIONAL TRANSVERSE SECTION DETAILS SEE SHEET 29/38 .
13. FOR ADDITIONAL PARAPET DETAILS, SEE SHEETS 26/38 THRU 27/38 .

NO.	REVISIONS	DATE
	RECORD DRAWINGS	08-09-13

DESIGN AGENCY: WALSH HNTB (WALSH CONSTRUCTION)

CLEVELAND'S TUNNELBELT BRIDGES — OHIO DEPARTMENT OF TRANSPORTATION

BRIDGES 10 & 11

TRANSVERSE SECTION - 1

BRIDGE NO. CUY-77-1597 L AND CUY-90-1651 L/R
I-90 EB, I-90WB AND I-77SB RAMP OVER E 14TH STREET

DESIGNED	DRAWN	REVIEWED	DATE
RSB	RSB	JOL	03-11-11
CHECKED	CHECKED	STRUCTURE FILE NUMBER	
JTW	NJ	1807919/1807900/1807803	

CUY-90-14.90
PID No. 77332/85531

28/38

090_1651LTS001.dgn 1/8/2016 11:34:25 AM rstriegel

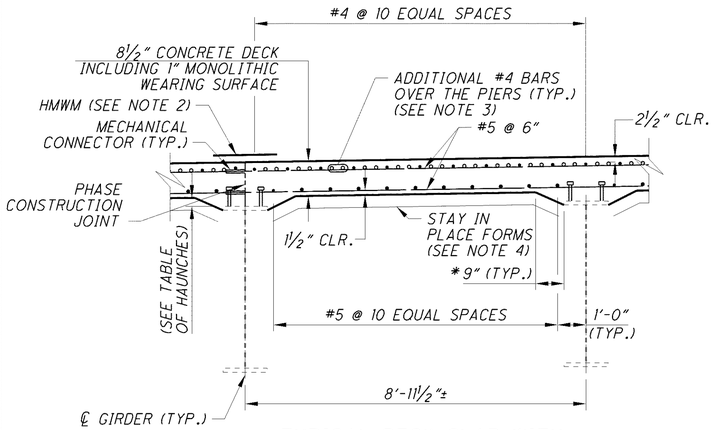

TYPICAL DECK SLAB WITH PHASE CONSTRUCTION JOINT AT GIRDER LINE

(CONST. RAMP E10)

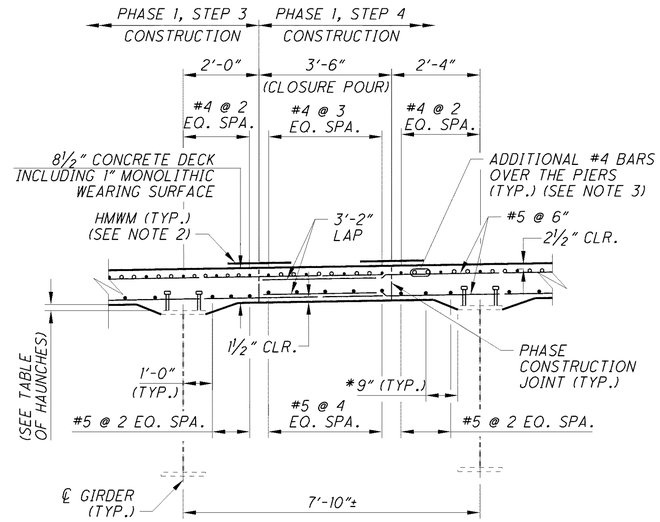

TYPICAL DECK SLAB WITH CLOSURE POUR

(I.R. 90 WB)

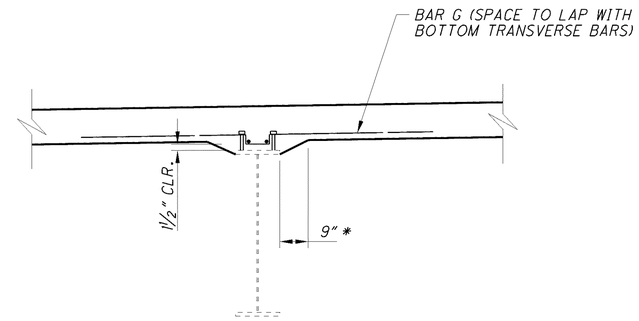

DEEP HAUNCH

(DECK STEEL NOT SHOWN FOR CLARITY)
(SEE NOTE 5)

* ACTUAL HAUNCH DIMENSION VARIES PER STAY IN PLACE FORM MANUFACTURER

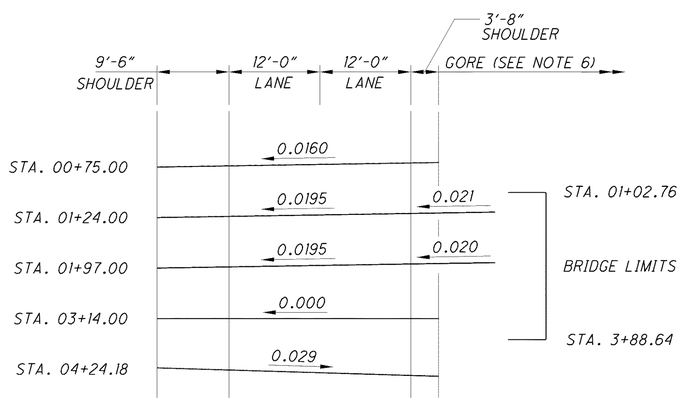

SUPERELEVATION TRANSITION DIAGRAM

(CONST. RAMP E10)
(SHOWN LOOKING DOWNSTATION)

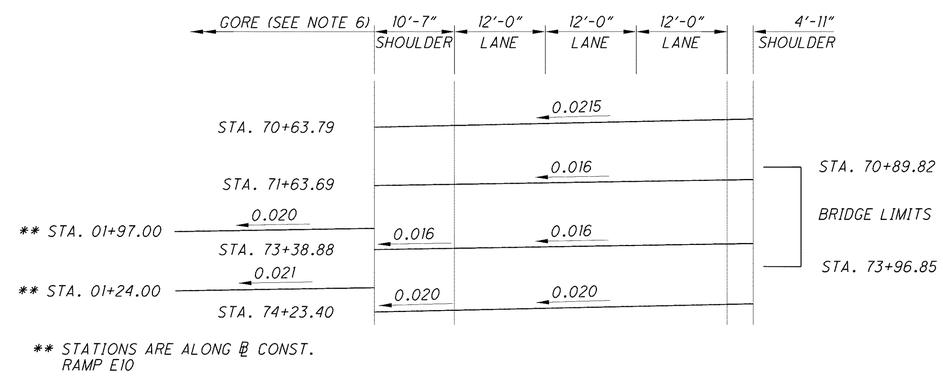

** STATIONS ARE ALONG ℄ CONST. RAMP E10

SUPERELEVATION TRANSITION DIAGRAM

(I.R. 90 WB)

TABLE OF HAUNCHES (INCHES) #												
GIRDER / LOCATION	A	B	C	D	E	F	G	H	J	K	L	M
REAR ABUTMENT	2¼"	2¼"	2½"	2¾"	3⅝"	6½"	6"	5⅜"	4⅞"	4⅜"	4"	4"
PIER 1	2"	1¾"	2"	2⅜"	2⅝"	4"	3¾"	3¼"	3¼"	3⅛"	3"	3¼"
PIER 2	2½"	1½"	1¼"	0¾"	0⅞"	2½"	2⅝"	2¾"	2¾"	2⅞"	2⅞"	2¾"
PIER 3	3⅞"	3⅜"	3¾"	3⅜"	3¼"	3⅜"	3¼"	3⅜"	3⅜"	3⅝"	3¾"	3¾"
FORWARD ABUTMENT	4"	3⅝"	3¼"	3⅛"	3¼"	3⅛"	2⅞"	2⅝"	2¾"	2¾"	3⅛"	3⅝"

BOTTOM OF DECK TO TOP OF GIRDER TOP FLANGE

NOTES:

1. FOR ADDITIONAL NOTES AND DETAILS, SEE SHEET 28/38 .
2. SEAL CONSTRUCTION JOINT WITH 2'-0" WIDE HIGH MOLECULAR WEIGHT METHACRYLATE (HMWM).
3. FOR DETAILS OF ADDITIONAL REINFORCING OVER THE PIERS, SEE SHEET 27/38 .
4. REMOVABLE FORMS SHALL BE PROVIDED WITHIN 5'-0" OF BOTH SIDES OF ANY EXPANSION JOINT OR SCUPPER LOCATION. THE MAXIMUM ALLOWABLE WEIGHT FOR THE STAY IN PLACE FORMS FOR GIRDERS A THRU E SHALL BE 15.8 PSF. THE MAXIMUM ALLOWABLE WEIGHT FOR THE STAY IN PLACE FORMS FOR GIRDERS F THRU M SHALL BE 14.6 PSF. THE MAXIMUM ALLOWABLE WEIGHT INCLUDES ADDITIONAL CONCRETE WEIGHT REQUIRED TO FILL FLUTES OF THE STAY IN PLACE FORMS.
5. FOR REBAR DETAILS AND LIMITS OF DEEP HAUNCH REINFORCEMENT, SEE SHEETS 25/38 AND 27/38 .
6. THE CROSS SLOPES SHOWN FOR THE GORE AREA ARE REPRESENTATIVE OF THE SLOPE REQUIRED TO CLOSE THE GAP BETWEEN CUY-90-1651L AND CUY-77-1597.

NO.	REVISIONS	DATE
	RECORD DRAWINGS	01-29-13

DESIGN AGENCY: WALSH HNTB (WALSH CONSTRUCTION)

CLEVELAND'S INNERBELT BRIDGE 90 — OHIO DEPARTMENT OF TRANSPORTATION

BRIDGES 10 & 11

TRANSVERSE SECTION - 2

BRIDGE NO. CUY-77-1597 L AND CUY-90-1651 L/R
I-90 EB, I-90WB AND I-77SB RAMP OVER E 14TH STREET

DESIGNED	DRAWN	REVIEWED	DATE
RSB	RSB	JOL	03-11-11
CHECKED	CHECKED	STRUCTURE FILE NUMBER	
JTW	NJ	1807919/1807900/1807803	

CUY-90-14.90
PID No. 77332/85531

29/38

29/38

090_1651LTS002.dgn 1/8/2016 11:34:32 AM rstriegel

SCREED ELEVATIONS

LOCATION		℄ BRG. REAR ABUT.	SPAN 1			℄ BRG. PIER 1	SPAN 2				℄ BRG. PIER 2	SPAN 3					℄ BRG. PIER 3
			1/4 PT.	1/2 PT.	3/4 PT.		1/4 PT.	F.S. 1	1/2 PT.	3/4 PT.		F.S. 2	1/4 PT.	1/2 PT.	3/4 PT.	F.S. 3	
LEFT TOE OF PARAPET	STATION	3+86.69	3+75.18	3+63.67	3+52.17	3+40.66	3+22.43		3+04.20	2+85.97	2+67.74		2+42.63	2+17.51	1+92.39		1+67.28
	FINAL TOP OF DECK ELEV.	692.61	692.68	692.73	692.75	692.75	692.68		692.56	692.38	692.12		691.66	691.08	690.37		689.56
	*** ADJUSTED REBOUND	-				-					-						-
	**** DECK SCREED ELEVATION																
GIRDER A	STATION	3+86.67	3+75.16	3+63.65	3+52.14	3+40.64	3+22.38	3+20.63	3+04.13	2+85.88	2+67.62	2+47.33	2+42.51	2+17.39	1+92.28	1+87.46	1+67.17
	* ELEV. AFTER DECK REMOVAL	-				-					-						-
	* ELEV. BEFORE DECK REMOVAL	-				-					-						-
	** SURVEYED REBOUND	-				-					-						-
	*** ADJUSTED REBOUND	-				-					-						-
	FINAL TOP OF DECK ELEV.	692.60	692.67	692.72	692.75	692.74	692.68	692.67	692.56	692.38	692.13	691.77	691.67	691.08	690.38	690.23	689.57
	**** DECK SCREED ELEVATION																
GIRDER B	STATION	3+86.39	3+74.88	3+63.37	3+51.87	3+40.36	3+21.79	3+20.35	3+03.22	2+84.65	2+66.08	2+45.79	2+40.97	2+15.85	1+90.74	1+85.92	1+65.62
	* ELEV. AFTER DECK REMOVAL	-				-					-						-
	* ELEV. BEFORE DECK REMOVAL	-				-					-						-
	** SURVEYED REBOUND	-				-					-						-
	*** ADJUSTED REBOUND	-				-					-						-
	FINAL TOP OF DECK ELEV.	692.43	692.53	692.61	692.66	692.68	692.66	692.66	692.57	692.41	692.17	691.84	691.75	691.19	690.5	690.36	689.69
	**** DECK SCREED ELEVATION																
GIRDER C	STATION	3+86.12	3+74.61	3+63.10	3+51.59	3+40.09	3+21.20	3+20.07	3+02.31	2+83.42	2+64.54	2+44.24	2+39.42	2+14.31	1+89.20	1+84.38	1+64.08
	* ELEV. AFTER DECK REMOVAL	-				-					-						-
	* ELEV. BEFORE DECK REMOVAL	-				-					-						-
	** SURVEYED REBOUND	-				-					-						-
	*** ADJUSTED REBOUND	-				-					-						-
	FINAL TOP OF DECK ELEV.	692.26	692.39	692.50	692.57	692.62	692.63	692.64	692.58	692.44	692.23	691.91	691.83	691.30	690.63	690.49	689.81
	**** DECK SCREED ELEVATION																

SCREED ELEVATIONS

LOCATION		℄ BRG. PIER 3	SPAN 4			℄ BRG. FWD. ABUT.
			1/4 PT.	1/2 PT.	3/4 PT.	
LEFT TOE OF PARAPET	STATION	1+67.28	1+52.02	1+36.71	1+21.40	1+06.09
	FINAL TOP OF DECK ELEV.	689.56	689.02	688.48	687.95	687.45
	*** ADJUSTED REBOUND	-				
	**** DECK SCREED ELEVATION					
GIRDER A	STATION	1+67.17	1+51.91	1+36.61	1+21.31	1+06.01
	* ELEV. AFTER DECK REMOVAL	-				-
	* ELEV. BEFORE DECK REMOVAL	-				-
	** SURVEYED REBOUND	-				-
	*** ADJUSTED REBOUND	-				-
	FINAL TOP OF DECK ELEV.	689.57	689.03	688.49	687.96	687.46
	**** DECK SCREED ELEVATION					
GIRDER B	STATION	1+65.62	1+50.52	1+35.42	1+20.31	1+05.18
	* ELEV. AFTER DECK REMOVAL	-				-
	* ELEV. BEFORE DECK REMOVAL	-				-
	** SURVEYED REBOUND	-				-
	*** ADJUSTED REBOUND	-				-
	FINAL TOP OF DECK ELEV.	689.69	689.16	688.61	688.08	687.57
	**** DECK SCREED ELEVATION					
GIRDER C	STATION	1+64.08	1+49.13	1+34.24	1+19.32	1+04.36
	* ELEV. AFTER DECK REMOVAL	-				-
	* ELEV. BEFORE DECK REMOVAL	-				-
	** SURVEYED REBOUND	-				-
	*** ADJUSTED REBOUND	-				-
	FINAL TOP OF DECK ELEV.	689.81	689.29	688.74	688.20	687.68
	**** DECK SCREED ELEVATION					

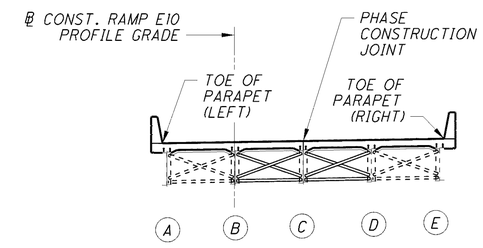

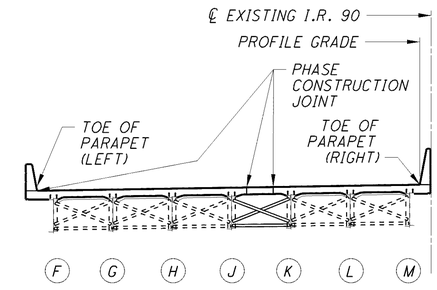

TYPICAL SLAB TRANSVERSE SECTION

(SPAN 1, SPAN 2 AND PART SPAN 3)

SCREED ELEVATIONS:

FIELD PROCEDURES DURING CONSTRUCTION OF DECKS.

1. SURVEY BOTTOM OF EXISTING GIRDERS AT THE LOCATIONS SHOWN IN THE TABLE PRIOR TO DECK REMOVAL AND THEN AFTER DECK REMOVAL.
2. COMPUTE THE AMOUNT OF SURVEYED REBOUND FOR THE GIRDERS BY SUBTRACTING THE ELEVATIONS AFTER REMOVAL FROM THE ELEVATIONS BEFORE REMOVAL.
3. COMPUTE THE ADJUSTED REBOUND FOR THE GIRDERS BY MULTIPLYING THE SURVEYED REBOUND BY THE RATIO OF THE PROPOSED DEAD LOAD TO THE EXISTING DEAD LOAD.
4. ADD THE AMOUNT OF ADJUSTED REBOUND TO THE FINAL TOP OF DECK ELEVATIONS TO OBTAIN THE DECK SCREED ELEVATIONS. USE REBOUND OF THE CLOSEST GIRDER TO DETERMINE TOE OF PARAPET, PHASE CONSTRUCTION JOINT AND CROWN LINE SCREED ELEVATIONS.

LEGEND:

* - BOTTOM OF BEAM ELEVATION SURVEYED DURING CONSTRUCTION.

** - SURVEYED REBOUND - SURVEYED GIRDER ELEVATION BEFORE DECK REMOVAL MINUS SURVEYED GIRDER ELEVATION AFTER DECK REMOVAL.

*** - ADJUSTED REBOUND - RATIO OF PROPOSED DEAD LOAD TO EXISTING DEAD LOAD (SEE BELOW) MULTIPLIED BY THE SURVEYED REBOUND. FOR TOE OF PARAPETS, PHASE CONSTRUCTION JOINT AND CROWN LINE USE THE CLOSEST GIRDER TO DETERMINE THE ADJUSTED REBOUND.

**** - DECK SCREED ELEVATION - ADJUSTED REBOUND ADDED TO THE FINAL TOP OF DECK ELEVATION.

$$\frac{\text{PROPOSED DEAD LOAD}}{\text{EXISTING DEAD LOAD}} = 0.97$$

NOTES:

1. FOR TYPICAL SECTION SHOWING PART SPAN 3 AND SPAN 4, SEE SHEET 31/38.

NO.	REVISIONS	DATE
	RECORD DRAWINGS	03-14-11

DESIGN AGENCY: WALSH CONSTRUCTION / HNTB

CLEVELAND'S INNERBELT BRIDGE — OHIO DEPARTMENT OF TRANSPORTATION

BRIDGES 10 & 11

SCREED ELEVATIONS - 1

BRIDGE NO. CUY-77-1597 L AND CUY-90-1651 L
I-90WB AND I-77SB RAMP OVER E 14TH STREET

DESIGNED	DRAWN	REVIEWED	DATE
RSB	RSB	JOL	03-11-11
CHECKED	CHECKED	STRUCTURE FILE NUMBER	
MRI	MRI	1807919/1807900	

CUY-90-14.90
PID No. 77332/85531

090_1651LSD008.dgn 1/8/2016 11:34:37 AM rstriegel

SCREED ELEVATIONS

LOCATION		℄ BRG. REAR ABUT.	SPAN 1			℄ BRG. PIER 1	SPAN 2				℄ BRG. PIER 2	SPAN 3					℄ BRG. PIER 3
			1/4 PT.	1/2 PT.	3/4 PT.		1/4 PT.	F.S. 1	1/2 PT.	3/4 PT.		F.S. 2	1/4 PT.	1/2 PT.	3/4 PT.	F.S. 3	
PHASE CONST. JOINT	STATION	3+86.12	3+74.61	3+63.10	3+51.59	3+40.09	3+21.20		3+02.31	2+83.42	2+64.54		2+39.42	2+14.31	1+89.20		1+64.08
	* ELEV. AFTER DECK REMOVAL	-					-										
	* ELEV. BEFORE DECK REMOVAL	-					-										
	** SURVEYED REBOUND	-					-										
	*** ADJUSTED REBOUND	-					-										
	FINAL TOP OF DECK ELEV.	692.26	692.39	692.50	692.57	692.62	692.63		692.58	692.44	692.23		691.83	691.3	690.63		689.81
	**** DECK SCREED ELEVATION																
GIRDER D	STATION	3+85.84	3+74.33	3+62.82	3+51.32	3+39.81	3+20.60	3+19.79	3+01.40	2+82.20	2+63.00	2+42.70	2+37.94	2+12.88	1+87.82	1+82.83	1+62.85
	* ELEV. AFTER DECK REMOVAL	-					-										
	* ELEV. BEFORE DECK REMOVAL	-					-										
	** SURVEYED REBOUND	-					-										
	*** ADJUSTED REBOUND	-					-										
	FINAL TOP OF DECK ELEV.	692.09	692.25	692.38	692.48	692.56	692.62	692.63	692.60	692.47	692.28	691.99	691.91	691.42	690.77	690.61	689.91
	**** DECK SCREED ELEVATION																
GIRDER E	STATION	3+85.56	3+74.05	3+62.55	3+51.04	3+39.53	3+20.01	3+19.52	3+00.49	2+80.97	2+61.45	2+41.16	2+36.41	2+11.37	1+86.33	1+81.29	1+61.61
	* ELEV. AFTER DECK REMOVAL	-					-										
	* ELEV. BEFORE DECK REMOVAL	-					-										
	** SURVEYED REBOUND	-					-										
	*** ADJUSTED REBOUND	-					-										
	FINAL TOP OF DECK ELEV.	691.93	692.11	692.27	692.40	692.50	692.61	692.61	692.61	692.51	692.34	692.10	692.03	691.58	690.89	690.74	690.01
	**** DECK SCREED ELEVATION																
RIGHT TOE OF PARAPET	STATION	3+85.54	3+74.04	3+62.53	3+51.02	3+39.51	3+19.97		3+00.43	2+80.88	2+61.34		2+36.30	2+11.26	-	-	-
	FINAL TOP OF DECK ELEV.	691.92	692.10	692.26	692.39	692.50	692.61		692.61	692.52	692.35		692.05	691.59	-	-	-
	*** ADJUSTED REBOUND																
	**** DECK SCREED ELEVATION																

SCREED ELEVATIONS

LOCATION		℄ BRG. PIER 3	SPAN 4			℄ BRG. FWD. ABUT.
			1/4 PT.	1/2 PT.	3/4 PT.	
PHASE CONST. JOINT	STATION	1+64.08	1+49.13	1+34.05	1+19.04	1+04.03
	* ELEV. AFTER DECK REMOVAL	-				
	* ELEV. BEFORE DECK REMOVAL	-				
	** SURVEYED REBOUND	-				
	*** ADJUSTED REBOUND	-				
	FINAL TOP OF DECK ELEV.	689.81	689.29	688.75	688.23	687.72
	**** DECK SCREED ELEVATION					
GIRDER D	STATION	1+62.85	1+48.12	1+33.43	1+18.69	1+03.90
	* ELEV. AFTER DECK REMOVAL	-				
	* ELEV. BEFORE DECK REMOVAL	-				
	** SURVEYED REBOUND	-				
	*** ADJUSTED REBOUND	-				
	FINAL TOP OF DECK ELEV.	689.91	689.36	688.81	688.27	687.74
	**** DECK SCREED ELEVATION					
GIRDER E	STATION	1+61.61	1+47.15	1+32.61	1+18.02	1+03.36
	* ELEV. AFTER DECK REMOVAL	-				
	* ELEV. BEFORE DECK REMOVAL	-				
	** SURVEYED REBOUND	-				
	*** ADJUSTED REBOUND	-				
	FINAL TOP OF DECK ELEV.	690.01	689.45	688.9	688.35	687.81
	**** DECK SCREED ELEVATION					
RIGHT TOE OF PARAPET	STATION	-	-	-	-	-
	FINAL TOP OF DECK ELEV.	-	-	-	-	-
	*** ADJUSTED REBOUND					
	**** DECK SCREED ELEVATION					

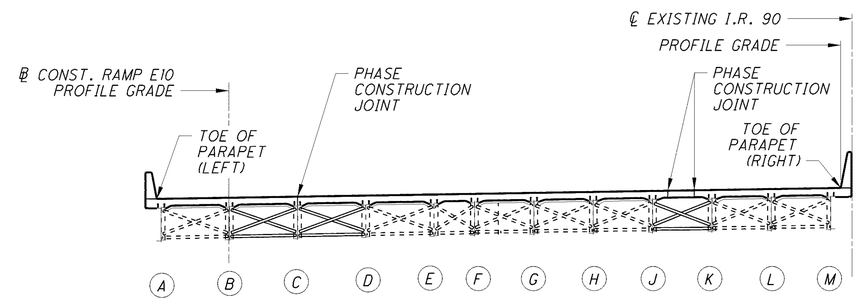

TYPICAL SLAB TRANSVERSE SECTION

(PART SPAN 3 AND SPAN 4)

LEGEND:

* - BOTTOM OF BEAM ELEVATION SURVEYED DURING CONSTRUCTION.

** - SURVEYED REBOUND - SURVEYED GIRDER ELEVATION BEFORE DECK REMOVAL MINUS SURVEYED GIRDER ELEVATION AFTER DECK REMOVAL.

*** - ADJUSTED REBOUND - RATIO OF PROPOSED DEAD LOAD TO EXISTING DEAD LOAD (SEE BELOW) MULTIPLIED BY THE SURVEYED REBOUND. FOR TOE OF PARAPETS, PHASE CONSTRUCTION JOINT AND CROWN LINE USE THE CLOSEST GIRDER TO DETERMINE THE ADJUSTED REBOUND.

**** - DECK SCREED ELEVATION - ADJUSTED REBOUND ADDED TO THE FINAL TOP OF DECK ELEVATION.

$$\frac{\text{PROPOSED DEAD LOAD}}{\text{EXISTING DEAD LOAD}} = 0.97$$

NOTES:

1. FOR ADDITIONAL NOTES, SEE SHEET 30/38.
2. FOR TYPICAL SECTION SHOWING SPAN 1, SPAN 2 AND PART SPAN 3, SEE SHEET 30/38.

NO.	REVISIONS	DATE
	RECORD DRAWINGS	03-14-11

DESIGN AGENCY: WALSH CONSTRUCTION / HNTB

CLEVELAND'S INNERBELT BRIDGE 90 — OHIO DEPARTMENT OF TRANSPORTATION

BRIDGES 10 & 11

SCREED ELEVATIONS - 2

BRIDGE NO. CUY-77-1597 L AND CUY-90-1651 L
I-90WB AND I-77SB RAMP OVER E 14TH STREET

DESIGNED RSB | CHECKED MRI | DRAWN RSB | CHECKED MRI | REVIEWED JOL | DATE 03-11-11 | STRUCTURE FILE NUMBER 1807919/1807900

CUY-90-14.90
PID No. 77332/85531

31/38

31/38

090_1651LSD009.dgn 1/8/2016 11:34:43 AM rstriegel

SCREED ELEVATIONS

LOCATION		℄ BRG. REAR ABUT.	SPAN 1			℄ BRG. PIER 1	SPAN 2				℄ BRG. PIER 2	SPAN 3					℄ BRG. PIER 3
			1/4 PT.	1/2 PT.	3/4 PT.		F.S. 1	1/4 PT.	1/2 PT.	3/4 PT.		F.S. 2	1/4 PT.	1/2 PT.	3/4 PT.	F.S. 3	
LEFT TOE OF PARAPET	STATION	70+99.33	71+13.09	71+26.84	71+40.59	71+54.34	-	71+74.66	71+94.97	72+15.28	72+35.60	-	72+60.35	72+85.10	-	-	-
	FINAL TOP OF DECK ELEV.	697.74	697.42	697.09	696.73	696.35	-	695.72	695.02	694.29	693.56	-	692.68	691.75	-	-	-
	*** ADJUSTED REBOUND	-					-										
	**** DECK SCREED ELEVATION																
GIRDER F	STATION	70+99.08	71+12.85	71+26.60	71+40.35	71+54.10	71+74.30	71+74.47	71+94.85	72+15.22	72+35.60	72+55.60	72+60.35	72+85.10	73+09.85	73+14.60	73+34.60
	* ELEV. AFTER DECK REMOVAL	-					-										
	* ELEV. BEFORE DECK REMOVAL	-					-										
	** SURVEYED REBOUND	-					-										
	*** ADJUSTED REBOUND	-					-										
	FINAL TOP OF DECK ELEV.	697.78	697.46	697.12	696.77	696.39	695.76	695.76	695.06	694.32	693.59	692.88	692.71	691.79	690.97	690.81	690.09
	**** DECK SCREED ELEVATION																
GIRDER G	STATION	70+97.97	71+11.75	71+25.50	71+39.25	71+53.00	71+73.20	71+73.65	71+94.30	72+14.95	72+35.60	72+55.60	72+60.35	72+85.10	73+09.85	73+14.60	73+34.60
	* ELEV. AFTER DECK REMOVAL	-					-										
	* ELEV. BEFORE DECK REMOVAL	-					-										
	** SURVEYED REBOUND	-					-										
	*** ADJUSTED REBOUND	-					-										
	FINAL TOP OF DECK ELEV.	697.96	697.64	697.29	696.93	696.55	695.92	695.91	695.20	694.46	693.72	693.00	692.83	691.94	691.08	690.91	690.2
	**** DECK SCREED ELEVATION																
GIRDER H	STATION	70+96.86	71+10.65	71+24.40	71+38.15	71+51.90	71+72.10	71+72.82	71+93.75	72+14.67	72+35.60	72+55.60	72+60.35	72+85.10	73+09.85	73+14.60	73+34.60
	* ELEV. AFTER DECK REMOVAL	-					-										
	* ELEV. BEFORE DECK REMOVAL	-					-										
	** SURVEYED REBOUND	-					-										
	*** ADJUSTED REBOUND	-					-										
	FINAL TOP OF DECK ELEV.	698.14	697.81	697.46	697.10	696.71	696.09	696.06	695.35	694.60	693.84	693.13	692.96	692.08	691.20	691.03	690.33
	**** DECK SCREED ELEVATION																

SCREED ELEVATIONS

LOCATION		℄ BRG. PIER 3	SPAN 4			℄ BRG. FWD. ABUT.
			1/4 PT.	1/2 PT.	3/4 PT.	
LEFT TOE OF PARAPET	STATION	-	-	-	-	-
	FINAL TOP OF DECK ELEV.	-	-	-	-	-
	*** ADJUSTED REBOUND	-				
	**** DECK SCREED ELEVATION					
GIRDER F	STATION	73+34.60	73+49.60	73+64.60	73+79.60	73+94.60
	* ELEV. AFTER DECK REMOVAL	-				
	* ELEV. BEFORE DECK REMOVAL	-				
	** SURVEYED REBOUND	-				
	*** ADJUSTED REBOUND	-				
	FINAL TOP OF DECK ELEV.	690.09	689.53	688.98	688.43	687.89
	**** DECK SCREED ELEVATION					
GIRDER G	STATION	73+34.60	73+49.60	73+64.60	73+79.60	73+94.60
	* ELEV. AFTER DECK REMOVAL	-				
	* ELEV. BEFORE DECK REMOVAL	-				
	** SURVEYED REBOUND	-				
	*** ADJUSTED REBOUND	-				
	FINAL TOP OF DECK ELEV.	690.20	689.66	689.11	688.56	688.01
	**** DECK SCREED ELEVATION					
GIRDER H	STATION	73+34.60	73+49.60	73+64.60	73+79.60	73+94.60
	* ELEV. AFTER DECK REMOVAL	-				
	* ELEV. BEFORE DECK REMOVAL	-				
	** SURVEYED REBOUND	-				
	*** ADJUSTED REBOUND	-				
	FINAL TOP OF DECK ELEV.	690.33	689.79	689.24	688.69	688.15
	**** DECK SCREED ELEVATION					

LEGEND:

* - BOTTOM OF BEAM ELEVATION SURVEYED DURING CONSTRUCTION.

** - SURVEYED REBOUND - SURVEYED GIRDER ELEVATION BEFORE DECK REMOVAL MINUS SURVEYED GIRDER ELEVATION AFTER DECK REMOVAL.

*** - ADJUSTED REBOUND - RATIO OF PROPOSED DEAD LOAD TO EXISTING DEAD LOAD (SEE BELOW) MULTIPLIED BY THE SURVEYED REBOUND. FOR TOE OF PARAPETS, PHASE CONSTRUCTION JOINT AND CROWN LINE USE THE CLOSEST GIRDER TO DETERMINE THE ADJUSTED REBOUND.

**** - DECK SCREED ELEVATION - ADJUSTED REBOUND ADDED TO THE FINAL TOP OF DECK ELEVATION.

$$\frac{\text{PROPOSED DEAD LOAD}}{\text{EXISTING DEAD LOAD}} = 0.96$$

NOTES:

1. FOR ADDITIONAL NOTES, SEE SHEET 30/38.
2. FOR TYPICAL SECTION SHOWING SPAN 1, SPAN 2 AND PART SPAN 3, SEE SHEET 30/38.
3. FOR TYPICAL SECTION SHOWING PART SPAN 3 AND SPAN 4, SEE SHEET 31/38.

NO.	REVISIONS	DATE
	RECORD DRAWINGS	03-14-11

DESIGN AGENCY: WALSH CONSTRUCTION / HNTB

BRIDGES 10 & 11

SCREED ELEVATIONS - 3

BRIDGE NO. CUY-77-1597 L AND CUY-90-1651 L
I-90WB AND I-77SB RAMP OVER E 14TH STREET

DESIGNED RSB | CHECKED MRI | DRAWN RSB | CHECKED MRI | REVIEWED JOL | DATE 03-11-11 | STRUCTURE FILE NUMBER 1807919/1807900

CUY-90-14.90
PID No. 77332/85531

32/38

32/38

090_1651LSD010.dgn 1/8/2016 11:34:53 AM rstriegel

SCREED ELEVATIONS

LOCATION		℄ BRG. REAR ABUT.	SPAN 1			℄ BRG. PIER 1	SPAN 2				℄ BRG. PIER 2	SPAN 3					℄ BRG. PIER 3
			1/4 PT.	1/2 PT.	3/4 PT.		F.S. 1	1/4 PT.	1/2 PT.	3/4 PT.		F.S. 2	1/4 PT.	1/2 PT.	3/4 PT.	F.S. 3	
GIRDER J	STATION	70+95.76	71+09.55	71+23.30	71+37.05	71+50.80	71+70.99	71+72.00	71+93.20	72+14.40	72+35.60	72+55.60	72+60.35	72+85.10	73+09.85	73+14.60	73+34.60
	* ELEV. AFTER DECK REMOVAL	-					-										
	* ELEV. BEFORE DECK REMOVAL	-					-										
	** SURVEYED REBOUND	-					-										
	*** ADJUSTED REBOUND	-					-										
	FINAL TOP OF DECK ELEV.	698.32	697.99	697.63	697.26	696.87	696.25	696.21	695.49	694.73	693.97	693.25	693.08	692.20	691.32	691.16	690.45
	**** DECK SCREED ELEVATION																
CONST. JOINT1	STATION	70+95.48	71+09.27	71+23.02	71+36.77	71+50.52		71+71.79	71+93.06	72+14.33	72+35.60		72+60.35	72+85.10	73+09.85		73+34.60
	* ELEV. AFTER DECK REMOVAL	-															
	* ELEV. BEFORE DECK REMOVAL	-															
	** SURVEYED REBOUND	-															
	*** ADJUSTED REBOUND	-															
	FINAL TOP OF DECK ELEV.	698.36	698.03	697.68	697.31	696.91		696.25	695.53	694.76	694.00		693.11	692.23	691.36		690.49
	**** DECK SCREED ELEVATION																
CONST. JOINT2	STATION	70+94.99	71+08.77	71+22.52	71+36.27	71+50.02		71+71.42	71+92.81	72+14.20	72+35.60		72+60.35	72+85.10	73+09.85		73+34.60
	* ELEV. AFTER DECK REMOVAL	-															
	* ELEV. BEFORE DECK REMOVAL	-															
	** SURVEYED REBOUND	-															
	*** ADJUSTED REBOUND	-															
	FINAL TOP OF DECK ELEV.	698.44	698.11	697.76	697.38	696.99		696.32	695.59	694.83	694.06		693.17	692.29	691.41		690.54
	**** DECK SCREED ELEVATION																

SCREED ELEVATIONS

LOCATION		℄ BRG. PIER 3	SPAN 4			℄ BRG. FWD. ABUT.
			1/4 PT.	1/2 PT.	3/4 PT.	
GIRDER J	STATION	73+34.60	73+49.60	73+64.60	73+79.60	73+94.60
	* ELEV. AFTER DECK REMOVAL	-				
	* ELEV. BEFORE DECK REMOVAL	-				
	** SURVEYED REBOUND	-				
	*** ADJUSTED REBOUND	-				
	FINAL TOP OF DECK ELEV.	690.45	689.91	689.37	688.83	688.30
	**** DECK SCREED ELEVATION					
CONST. JOINT1	STATION	73+34.60	73+49.60	73+64.60	73+79.60	73+94.60
	* ELEV. AFTER DECK REMOVAL	-				
	* ELEV. BEFORE DECK REMOVAL	-				
	** SURVEYED REBOUND	-				
	*** ADJUSTED REBOUND	-				
	FINAL TOP OF DECK ELEV.	690.49	689.95	689.41	688.87	688.33
	**** DECK SCREED ELEVATION					
CONST. JOINT2	STATION	73+34.60	73+49.60	73+64.60	73+79.60	73+94.60
	* ELEV. AFTER DECK REMOVAL	-				
	* ELEV. BEFORE DECK REMOVAL	-				
	** SURVEYED REBOUND	-				
	*** ADJUSTED REBOUND	-				
	FINAL TOP OF DECK ELEV.	690.54	690.01	689.47	688.93	688.40
	**** DECK SCREED ELEVATION					

LEGEND:

* - BOTTOM OF BEAM ELEVATION SURVEYED DURING CONSTRUCTION.

** - SURVEYED REBOUND - SURVEYED GIRDER ELEVATION BEFORE DECK REMOVAL MINUS SURVEYED GIRDER ELEVATION AFTER DECK REMOVAL.

*** - ADJUSTED REBOUND - RATIO OF PROPOSED DEAD LOAD TO EXISTING DEAD LOAD (SEE BELOW) MULTIPLIED BY THE SURVEYED REBOUND. FOR TOE OF PARAPETS, PHASE CONSTRUCTION JOINT AND CROWN LINE USE THE CLOSEST GIRDER TO DETERMINE THE ADJUSTED REBOUND.

**** - DECK SCREED ELEVATION - ADJUSTED REBOUND ADDED TO THE FINAL TOP OF DECK ELEVATION.

$$\frac{\text{PROPOSED DEAD LOAD}}{\text{EXISTING DEAD LOAD}} = 0.96$$

NOTES:

1. FOR ADDITIONAL NOTES, SEE SHEET 30/38.
2. FOR TYPICAL SECTION SHOWING SPAN 1, SPAN 2 AND PART SPAN 3, SEE SHEET 30/38.
3. FOR TYPICAL SECTION SHOWING PART SPAN 3 AND SPAN 4, SEE SHEET 31/38.

NO.	REVISIONS	DATE
	RECORD DRAWINGS	03-14-11

DESIGN AGENCY: WALSH HNTB (WALSH CONSTRUCTION)

CLEVELAND'S INNERBELT BRIDGES — THE COMMUNITY OF TRANSPORTATION

BRIDGES 10 & 11

SCREED ELEVATIONS - 4

BRIDGE NO. CUY-77-1597 L AND CUY-90-1651 L
I-90WB AND I-77SB RAMP OVER E 14TH STREET

DESIGNED RSB | CHECKED MRI | DRAWN RSB | CHECKED MRI | REVIEWED JOL | DATE 03-11-11 | STRUCTURE FILE NUMBER 1807919/1807900

CUY-90-14.90
PID No. 77332/85531

33/38

090_1651LSD011.dgn 1/8/2016 11:34:59 AM rstriegel

SCREED ELEVATIONS

LOCATION		℄ BRG. REAR ABUT.	SPAN 1			℄ BRG. PIER 1	SPAN 2				℄ BRG. PIER 2	SPAN 3					℄ BRG. PIER 3
			1/4 PT.	1/2 PT.	3/4 PT.		F.S. 1	1/4 PT.	1/2 PT.	3/4 PT.		F.S. 2	1/4 PT.	1/2 PT.	3/4 PT.	F.S. 3	
GIRDER K	STATION	70+94.67	71+08.45	71+22.20	71+35.95	71+49.70	71+69.89	71+71.17	71+92.65	72+14.12	72+35.60	72+55.60	72+60.35	72+85.10	73+09.85	73+14.60	73+34.60
	* ELEV. AFTER DECK REMOVAL	-					-										
	* ELEV. BEFORE DECK REMOVAL	-					-										
	** SURVEYED REBOUND	-					-										
	*** ADJUSTED REBOUND	-					-										
	FINAL TOP OF DECK ELEV.	698.50	698.16	697.81	697.43	697.04	696.41	696.37	695.64	694.87	694.09	693.38	693.21	692.33	691.45	691.28	690.58
	**** DECK SCREED ELEVATION																
GIRDER L	STATION	70+93.58	71+07.34	71+21.09	71+34.84	71+48.59	71+68.79	71+70.34	71+92.09	72+13.85	72+35.60	72+55.60	72+60.35	72+85.10	73+09.85	73+14.60	73+34.60
	* ELEV. AFTER DECK REMOVAL	-					-										
	* ELEV. BEFORE DECK REMOVAL	-					-										
	** SURVEYED REBOUND	-					-										
	*** ADJUSTED REBOUND	-					-										
	FINAL TOP OF DECK ELEV.	698.68	698.34	697.98	697.60	697.20	696.57	696.52	695.78	695.00	694.22	693.50	693.33	692.45	691.58	691.41	690.70
	**** DECK SCREED ELEVATION																
GIRDER M	STATION	70+92.49	71+06.24	71+19.99	71+33.74	71+47.49	71+67.69	71+69.52	71+91.54	72+13.57	72+35.60	72+55.60	72+60.35	72+85.10	73+09.85	73+14.60	73+34.60
	* ELEV. AFTER DECK REMOVAL	-					-										
	* ELEV. BEFORE DECK REMOVAL	-					-										
	** SURVEYED REBOUND	-					-										
	*** ADJUSTED REBOUND	-					-										
	FINAL TOP OF DECK ELEV.	698.86	698.52	698.15	697.77	697.36	696.73	696.67	695.93	695.14	694.34	693.63	693.46	692.58	691.70	691.53	690.83
	**** DECK SCREED ELEVATION																
RIGHT TOE OF PARAPET	STATION	70+92.30	71+06.06	71+19.81	71+33.56	71+47.31		71+69.38	71+91.45	72+13.52	72+35.60		72+60.35	72+85.10	73+09.85		73+34.60
	FINAL TOP OF DECK ELEV.	698.89	698.55	698.18	697.80	697.39		696.70	695.95	695.16	694.37		693.48	692.60	691.72		690.85
	*** ADJUSTED REBOUND																
	**** DECK SCREED ELEVATION																

SCREED ELEVATIONS

LOCATION		℄ BRG. PIER 3	SPAN 4			℄ BRG. FWD. ABUT.
			1/4 PT.	1/2 PT.	3/4 PT.	
GIRDER K	STATION	73+34.60	73+49.60	73+64.60	73+79.60	73+94.60
	* ELEV. AFTER DECK REMOVAL	-				
	* ELEV. BEFORE DECK REMOVAL	-				
	** SURVEYED REBOUND	-				
	*** ADJUSTED REBOUND	-				
	FINAL TOP OF DECK ELEV.	690.58	690.04	689.51	688.97	688.44
	**** DECK SCREED ELEVATION					
GIRDER L	STATION	73+34.60	73+49.60	73+64.60	73+79.60	73+94.60
	* ELEV. AFTER DECK REMOVAL	-				
	* ELEV. BEFORE DECK REMOVAL	-				
	** SURVEYED REBOUND	-				
	*** ADJUSTED REBOUND	-				
	FINAL TOP OF DECK ELEV.	690.70	690.17	689.64	689.11	688.59
	**** DECK SCREED ELEVATION					
GIRDER M	STATION	73+34.60	73+49.60	73+64.60	73+79.60	73+94.60
	* ELEV. AFTER DECK REMOVAL	-				
	* ELEV. BEFORE DECK REMOVAL	-				
	** SURVEYED REBOUND	-				
	*** ADJUSTED REBOUND	-				
	FINAL TOP OF DECK ELEV.	690.83	690.30	689.78	689.26	688.73
	**** DECK SCREED ELEVATION					
RIGHT TOE OF PARAPET	STATION	73+34.60	73+49.60	73+64.60	73+79.60	73+94.60
	FINAL TOP OF DECK ELEV.	690.85	690.33	689.80	689.28	688.76
	*** ADJUSTED REBOUND	-				-
	**** DECK SCREED ELEVATION	-				-

LEGEND:

* - BOTTOM OF BEAM ELEVATION SURVEYED DURING CONSTRUCTION.

** - SURVEYED REBOUND - SURVEYED GIRDER ELEVATION BEFORE DECK REMOVAL MINUS SURVEYED GIRDER ELEVATION AFTER DECK REMOVAL.

*** - ADJUSTED REBOUND - RATIO OF PROPOSED DEAD LOAD TO EXISTING DEAD LOAD (SEE BELOW) MULTIPLIED BY THE SURVEYED REBOUND. FOR TOE OF PARAPETS, PHASE CONSTRUCTION JOINT AND CROWN LINE USE THE CLOSEST GIRDER TO DETERMINE THE ADJUSTED REBOUND.

**** - DECK SCREED ELEVATION - ADJUSTED REBOUND ADDED TO THE FINAL TOP OF DECK ELEVATION.

$$\frac{\text{PROPOSED DEAD LOAD}}{\text{EXISTING DEAD LOAD}} = 0.96$$

NOTES:

1. FOR ADDITIONAL NOTES, SEE SHEET 30/38.
2. FOR TYPICAL SECTION SHOWING SPAN 1, SPAN 2 AND PART SPAN 3, SEE SHEET 30/38.
3. FOR TYPICAL SECTION SHOWING PART SPAN 3 AND SPAN 4, SEE SHEET 31/38.

NO.	REVISIONS	DATE
	RECORD DRAWINGS	03-14-11

DESIGN AGENCY: WALSH CONSTRUCTION / HNTB

CLEVELAND'S INNERBELT BRIDGES — THE COMMUNITY OF TRANSPORTATION

BRIDGES 10 & 11

SCREED ELEVATIONS - 5

BRIDGE NO. CUY-77-1597 L AND CUY-90-1651 L
I-90WB AND I-77SB RAMP OVER E 14TH STREET

DESIGNED RSB | CHECKED MRI | DRAWN RSB | CHECKED MRI | REVIEWED JOL | DATE 03-11-11 | STRUCTURE FILE NUMBER 1807919/1807900

CUY-90-14.90
PID No. 77332/85531

34/38

090_1651LSD012.dgn 1/8/2016 11:35:04 AM rstriegel

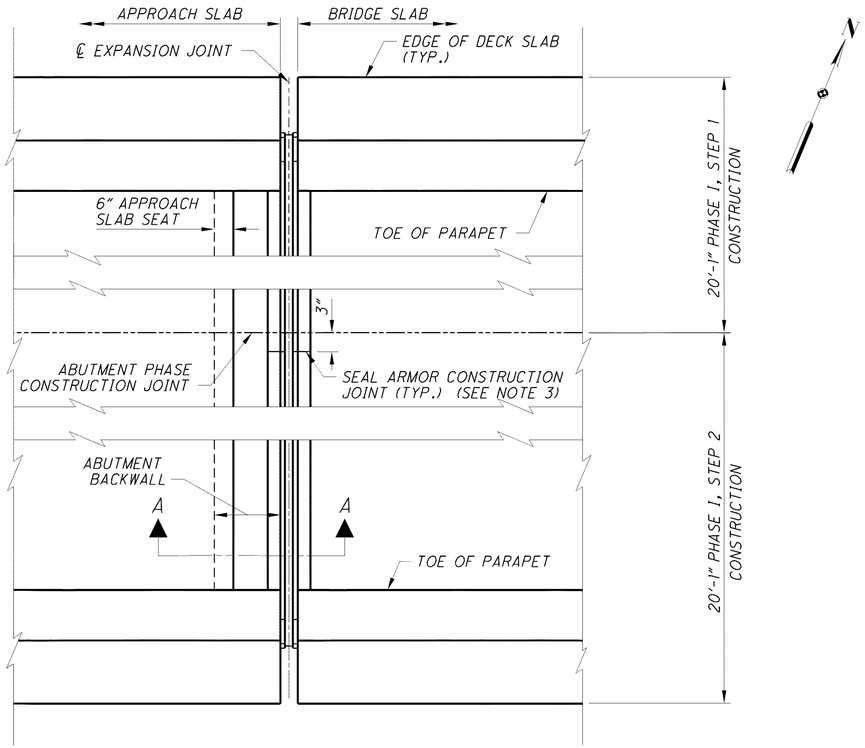

PART PLAN AT REAR ABUTMENT BRIDGE CUY-77-1597L

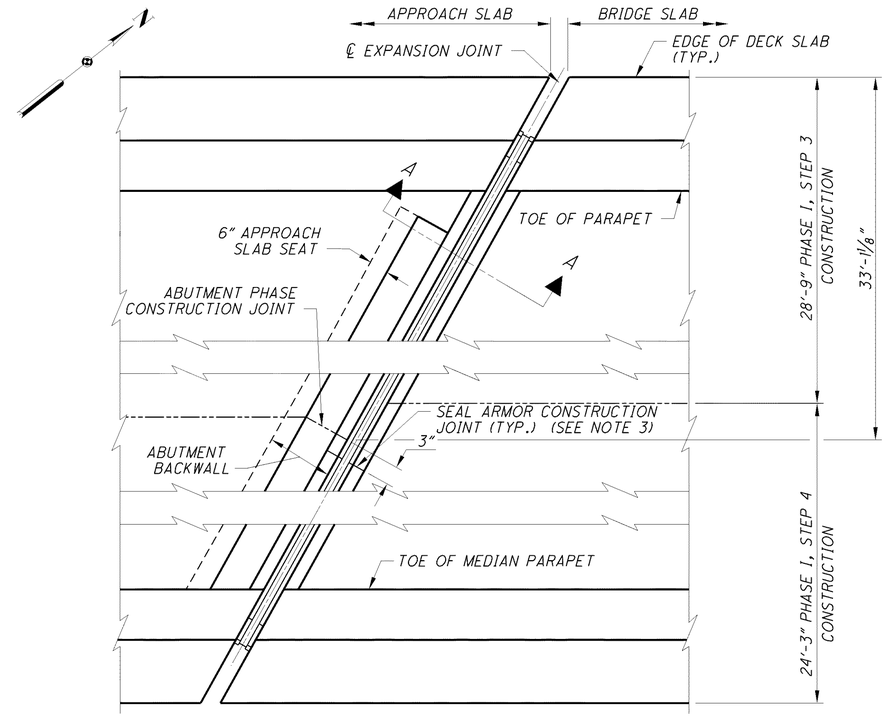

PART PLAN AT REAR ABUTMENT BRIDGE CUY-90-1651L

CUY-77-1597L STRIP SEAL JOINT WIDTH	
AMBIENT TEMPERATURE	DIMENSION "A"
	3" SEAL
90° F	1.32"
80° F	1.41"
70° F	1.51"
60° F	1.60"
50° F	1.69"
40° F	1.79"
30° F	1.88"

CUY-90-1651L STRIP SEAL JOINT WIDTH	
AMBIENT TEMPERATURE	DIMENSION "A"
	3" SEAL
90° F	1.27"
80° F	1.38"
70° F	1.49"
60° F	1.60"
50° F	1.71"
40° F	1.82"
30° F	1.93"

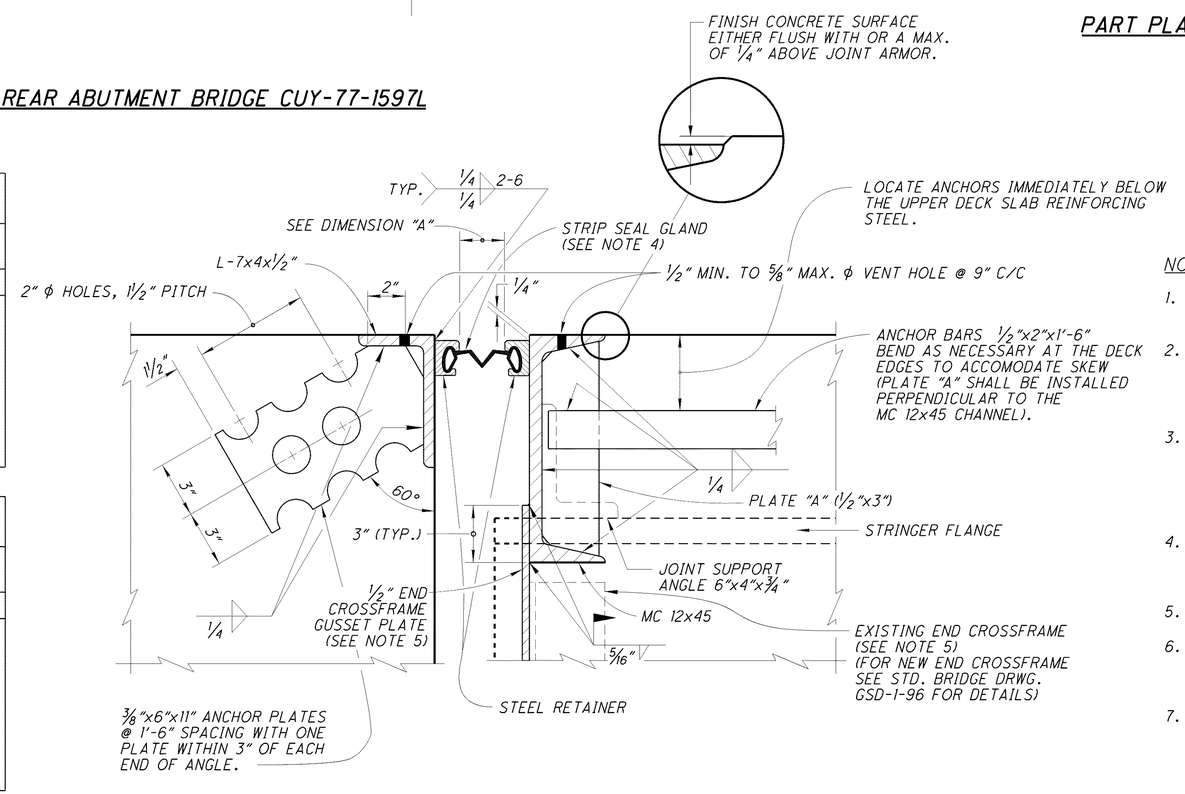

NOTES:

1. FOR ADDITIONAL DETAILS AND NOTES, REFER TO ODOT STANDARD DRAWING EXJ-4-87 SHEETS 1 THRU 5.
2. MINIMUM JOINT OPENING (DIMENSION "A") AT THE TIME OF SEAL GLAND INSTALLATION SHALL NOT BE LESS THAN 1½". IF THE JOINT OPENING IS LESS, INSTALLATION SHALL BE POSTPONED UNTIL THE TEMPERATURE DROPS SUFFICIENT AMOUNT TO ALLOW THE MINIMUM 1½" OPENING.
3. EXPANSION DEVICE REQUIRES COMPLETE PENETRATION WELDED BUTT JOINTS. BUTT WELDS IN CONTACT WITH THE SEALING GLAND SHALL BE GROUND FLUSH AT THE CONTACT AREA. THE CONSTRUCTION JOINT FOR THE MC 12x45 SHALL NOT BE LOCATED WITHIN THE LIMITS OF THE END CROSSFRAME GUSSET PLATE. RELOCATE THE MC 12x45 CONSTRUCTION JOINT AS NEEDED TO CLEAR THE GUSSET PLATE.
4. THE INSTALLATION SEQUENCE OF THE EXPANSION JOINT SHALL FOLLOW THE PHASE CONSTRUCTION DETAIL SEQUENCE. STRIP SEAL GLAND MUST BE INSTALLED IN ONE CONTINUOUS PIECE.
5. FOR ADDITIONAL RETROFIT INFORMATION, SEE SHEET 23/38.
6. INSTALLATION OF SEAL: DURING INSTALLATION OF THE SUPPORT/ARMOR FOR THE SUPERSTRUCTURE SIDE OF THE EXPANSION JOINT SEAL, OBSERVE THE SEATING OF GIRDERS ON BEARINGS TO ASSURE THAT POSITIVE BEARING IS MAINTAINED.
7. FOR ADDITIONAL SEAL ARMOR DIMENSIONS AND ELEVATIONS, SEE ABUTMENTS SHEETS 18/38 AND 19/38.

NO.	REVISIONS	DATE
	RECORD DRAWINGS	03-14-11

DESIGN AGENCY: WALSH HNTB (WALSH CONSTRUCTION)

CLEVELAND'S INNERBELT BRIDGE — OHIO DEPARTMENT OF TRANSPORTATION

BRIDGES 10 & 11

STRIP SEAL EXPANSION JOINT DETAILS - 1

BRIDGE NO. CUY-77-1597 L AND CUY-90-1651 L
I-90WB AND I-77SB RAMP OVER E 14TH STREET

DESIGNED	DRAWN	REVIEWED	DATE
RSB	JTW	JOL	03-11-11
CHECKED	CHECKED	STRUCTURE FILE NUMBER	
JTW	NJ	1807919/1807900	

CUY-90-14.90
PID No. 77332/85531

35/38

35/38

090_1651LEX001.dgn 1/8/2016 11:35:09 AM rstriegel

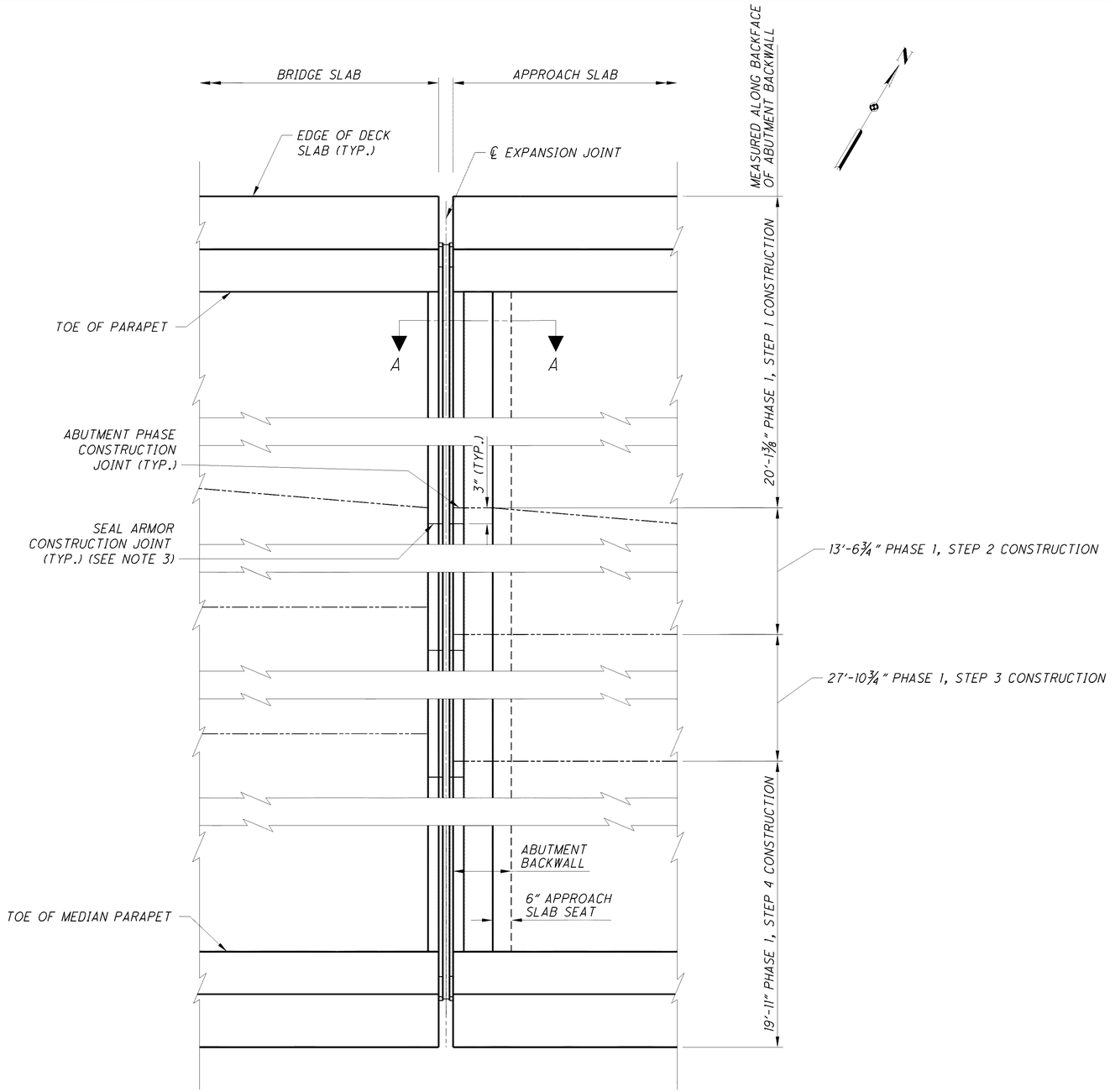

PART PLAN AT FORWARD ABUTMENT BRIDGE CUY-77-1527L AND CUY-90-1651L

STRIP SEAL JOINT WIDTH	
AMBIENT TEMPERATURE	DIMENSION "A"
	3" SEAL
90° F	1.23"
80° F	1.35"
70° F	1.48"
60° F	1.60"
50° F	1.72"
40° F	1.85"
30° F	1.97"

NOTES:

1. FOR ADDITIONAL DETAILS AND NOTES, REFER TO ODOT STANDARD DRAWING EXJ-4-87 SHEETS 1 THRU 5.
2. MINIMUM JOINT OPENING (DIMENSION "A") AT THE TIME OF SEAL GLAND INSTALLATION SHALL NOT BE LESS THAN 1½". IF THE JOINT OPENING IS LESS, INSTALLATION SHALL BE POSTPONED UNTIL THE TEMPERATURE DROPS SUFFICIENT AMOUNT TO ALLOW THE MINIMUM 1½" OPENING.
3. EXPANSION DEVICE REQUIRES COMPLETE PENETRATION WELDED BUTT JOINTS. BUTT WELDS IN CONTACT WITH THE SEALING GLAND SHALL BE GROUND FLUSH AT THE CONTACT AREA. THE CONSTRUCTION JOINT FOR THE MC 12x45 SHALL NOT BE LOCATED WITHIN THE LIMITS OF THE END CROSSFRAME GUSSET PLATE. RELOCATE THE MC 12x45 CONSTRUCTION JOINT AS NEEDED TO CLEAR THE GUSSET PLATE.
4. THE INSTALLATION SEQUENCE OF THE EXPANSION JOINT SHALL FOLLOW THE PHASE CONSTRUCTION DETAIL SEQUENCE. STRIP SEAL GLAND MUST BE INSTALLED IN ONE CONTINUOUS PIECE.
5. FOR SECTION A-A, SEE SHEET 35/38 .
6. INSTALLATION OF SEAL: DURING INSTALLATION OF THE SUPPORT/ARMOR FOR THE SUPERSTRUCTURE SIDE OF THE EXPANSION JOINT SEAL, OBSERVE THE SEATING OF GIRDERS ON BEARINGS TO ASSURE THAT POSITIVE BEARING IS MAINTAINED.
7. FOR ADDITIONAL SEAL ARMOR DIMENSIONS AND ELEVATIONS, SEE ABUTMENT SHEETS 18/38 AND 19/38.

NO.	REVISIONS	DATE
	RECORD DRAWINGS	03-14-11

DESIGN AGENCY: WALSH HNTB (WALSH CONSTRUCTION)

CLEVELAND'S INNERBELT BRIDGE — OHIO DEPARTMENT OF TRANSPORTATION

BRIDGES 10 & 11

STRIP SEAL EXPANSION JOINT DETAILS - 2

BRIDGE NO. CUY-77-1597 L AND CUY-90-1651 L
I-90WB AND I-77SB RAMP OVER E 14TH STREET

DESIGNED	DRAWN	REVIEWED	DATE
RSB	JTW	JOL	03-11-11
CHECKED	CHECKED	STRUCTURE FILE NUMBER	
JTW	NJ	1807919/1807900	

CUY-90-14.90
PID No. 77332/85531

36/38

36/38

090_1651LEX002.dgn 1/8/2016 11:35:15 AM rstriegel

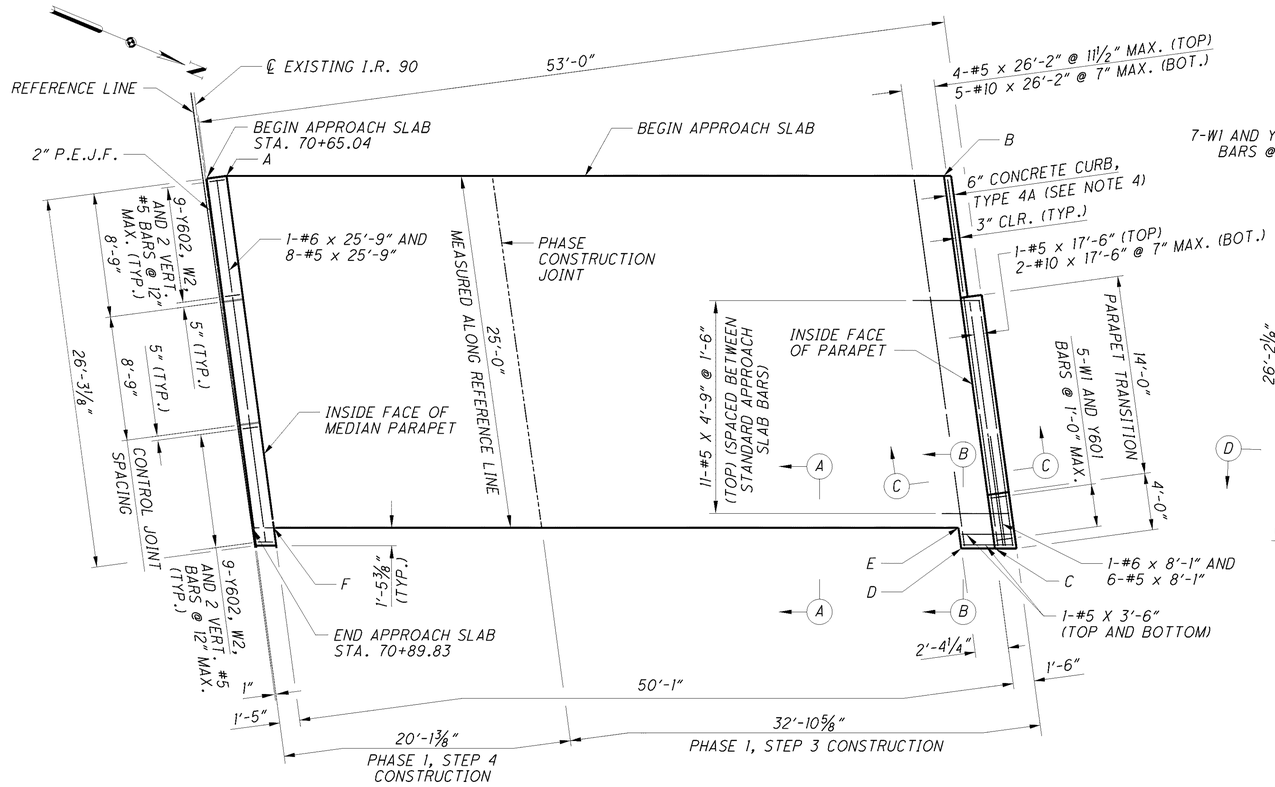

REAR APPROACH SLAB (I.R. 90 WESTBOUND)

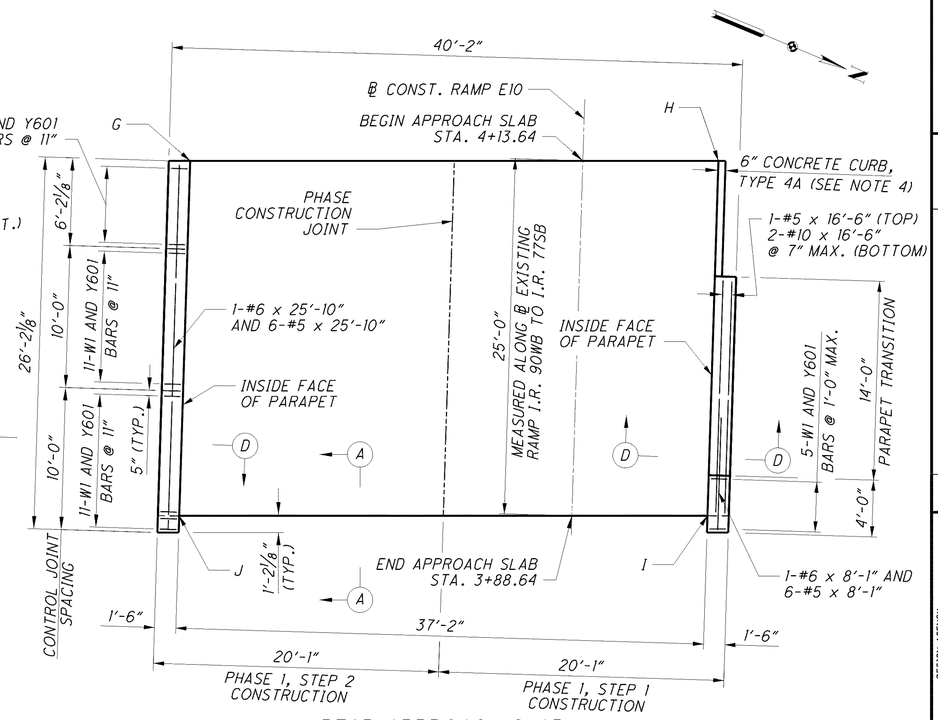

REAR APPROACH SLAB

(I.R. 90 WESTBOUND TO I.R. 77 SOUTHBOUND)

REAR APPROACH SLAB LOCATIONS (I.R. 90WB)			
	STATION	OFFSET	ELEVATION
A	70+65.04	1.50 LT	699.58
B	70+71.67	51.56 LT	698.36
C	70+98.51	51.58 LT	697.76
D	70+98.17	49.23 LT	697.81
E	70+96.69	49.24 LT	697.84
F	70+90.03	1.50 LT	698.95

REAR APPROACH SLAB LOCATIONS (CONST. RAMP E10)			
	STATION	OFFSET	ELEVATION
G	4+12.79	27.63 LT	691.37
H	4+13.94	9.54 RT	692.32
I	3+88.94	9.54 RT	692.59
J	3+87.79	27.63 LT	691.88

FORWARD APPROACH SLAB LOCATIONS			
	STATION	OFFSET	ELEVATION
K	73+96.85	1.50 LT	688.68
L	1+03.80	9.49 RT	687.38
M	0+78.43	9.47 RT	686.54
N	74+21.85	1.50 LT	687.82

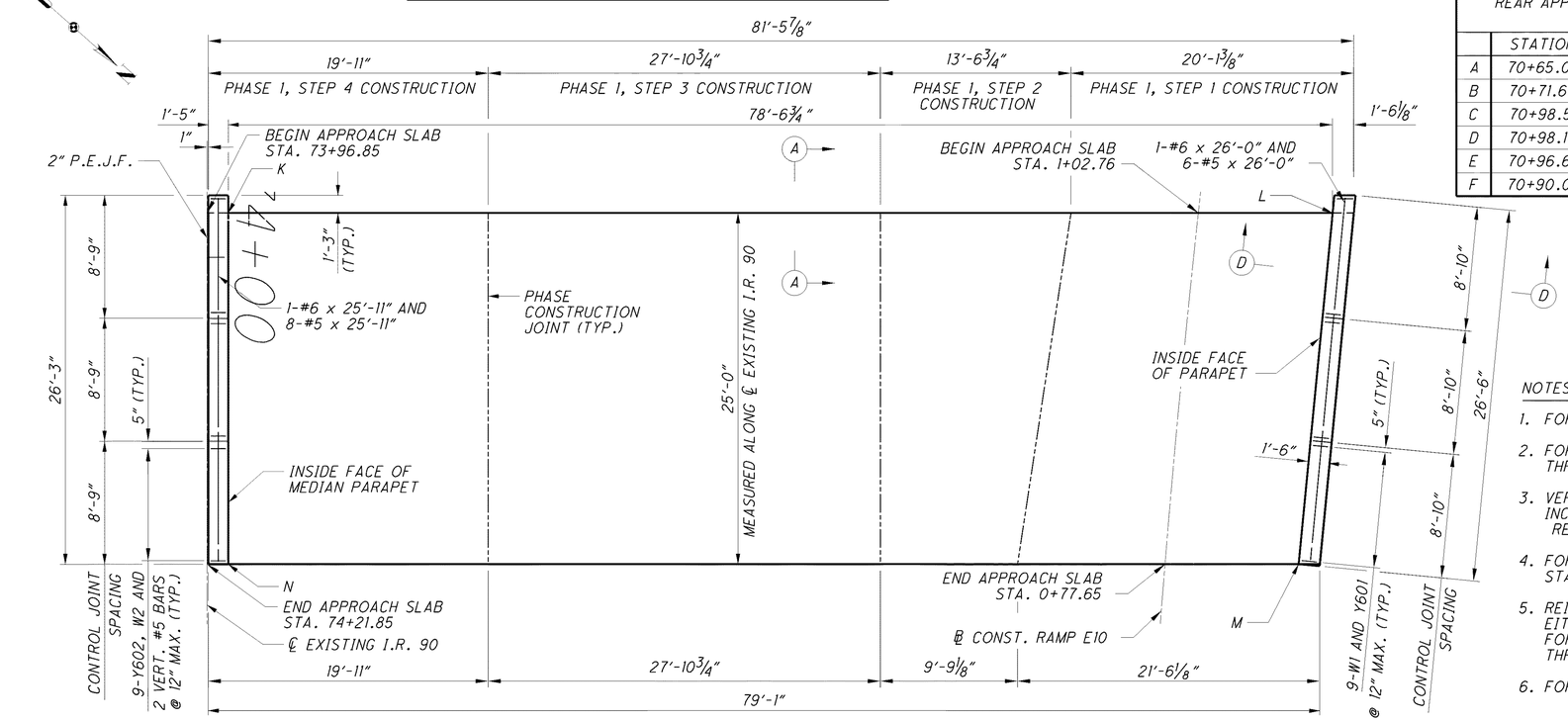

FORWARD APPROACH SLAB

NOTES:

1. FOR ADDITIONAL NOTES AND DETAILS, SEE SHEET 38/38.
2. FOR PARAPET TRANSITION ELEVATION VIEW, DETAILS AND SECTIONS A-A THRU D-D, SEE SHEET 38/38.
3. VERTICAL REINFORCING STEEL SHALL CLEAR CONTROL JOINTS BY THREE INCHES MINIMUM. OBTAIN CLEARANCE BY FIELD ADJUSTING TH REINFORCING STEEL SPACING.
4. FOR ADDITIONAL CONCRETE CURB NOTES AND DETAILS, SEE ODOT STANDARD DRAWING BP-5.1.
5. REINFORCING STEEL ACROSS THE PHASE CONSTRUCTION JOINT SHALL EITHER BE LAPPED OR MECHANICALLY CONNECTED. MINIMUM LAP LENGTH FOR #5 BAR SHALL BE 3'-3". MECHANICAL CONNECTOR SHALL BE A THREADED TYPE.
6. FOR LOCATIONS OF PCB BARRIER SEE MOT PLANS PHASE 1 THRU PHASE 5.

NO.	REVISIONS	DATE
	RECORD DRAWINGS	08-09-13

DESIGN AGENCY: WALSH HNTB (WALSH CONSTRUCTION)

BRIDGES 10 & 11

APPROACH SLAB DETAILS - 1

BRIDGE NO. CUY-77-1597 L AND CUY-90-1651 L
I-90WB AND I-77SB RAMP OVER E 14TH STREET

DESIGNED RSB | CHECKED NJ | DRAWN CEM | CHECKED NJ | REVIEWED JOL | DATE 03-11-11 | STRUCTURE FILE NUMBER 1807919/1807900

CUY-90-14.90
PID No. 77332/85531

37/38

37/38

090_1651L MD001.dgn 1/8/2016 11:35:21 AM rstriegel

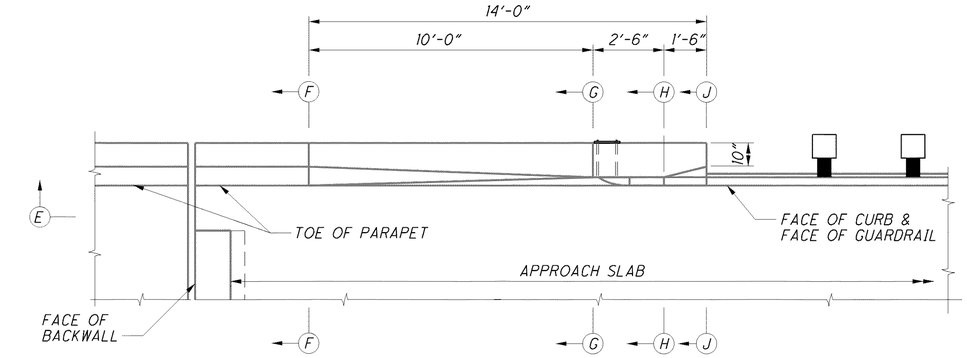

PART PLAN AT ABUTMENT

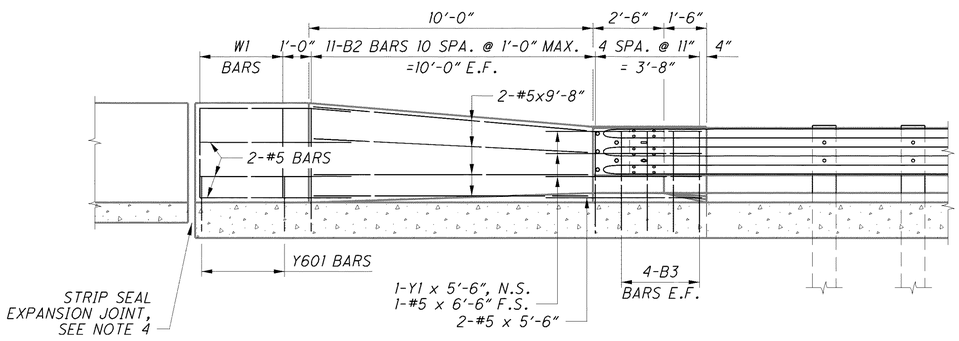

SECTION E-E

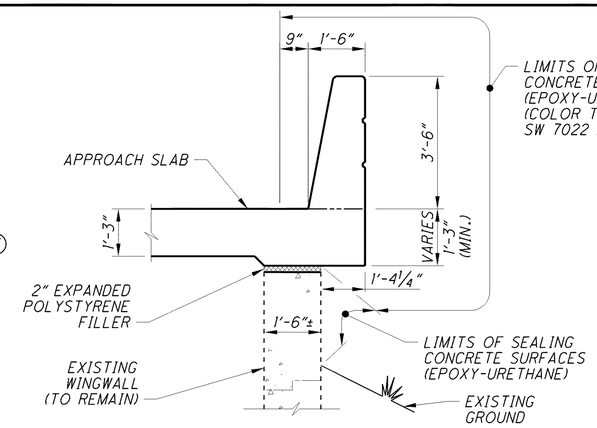

SECTION C-C

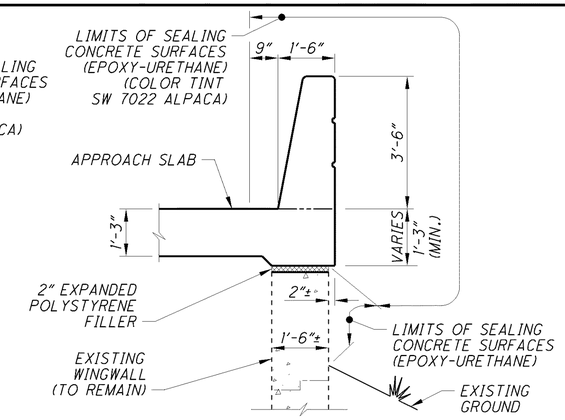

SECTION D-D

NOTES:

1. FOR ADDITIONAL APPROACH SLAB DETAILS, SEE ODOT STD. DRAWING AS-1-81.
2. FOR ADDITIONAL PARAPET DETAILS, SEE ODOT STD. DRAWING SBR-1-99.
3. FOR LOCATIONS OF SECTIONS A-A THRU D-D, SEE SHEET 37/38.
4. FOR ADDITIONAL STRIP SEAL EXPANSION JOINT DETAILS, SEE SHEET 35/38 AND 36/38.
5. FOR SPACING AND PLACEMENT OF N1 BARS, SEE SHEETS 18/38 THRU 19/38.
6. ALL REINFORCING STEEL SHALL BE EPOXY COATED AND PER CMS 509.
7. FOR ADDITIONAL GUARDRAIL TERMINAL ASSEMBLY DETAILS, SEE ODOT STANDARD DRAWING GR-3.1 AND GR-3.2.
8. FOR DETAIL 1, SEE SHEET 27/38.

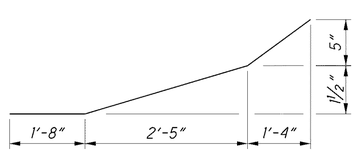

BARS Y1- #5

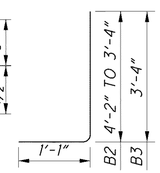

BARS B2 AND B3 - #6

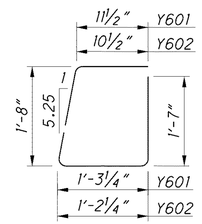

BARS Y601 AND Y602 - #6

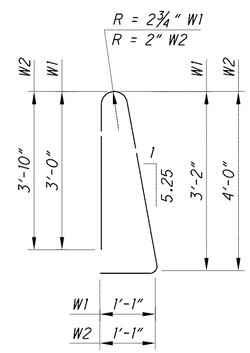

BAR W1 AND W2 - #5

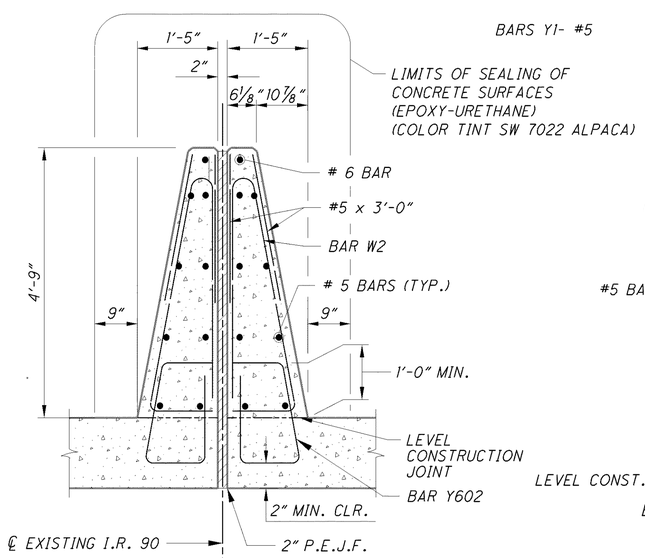

TYPICAL MEDIAN PARAPET DETAIL

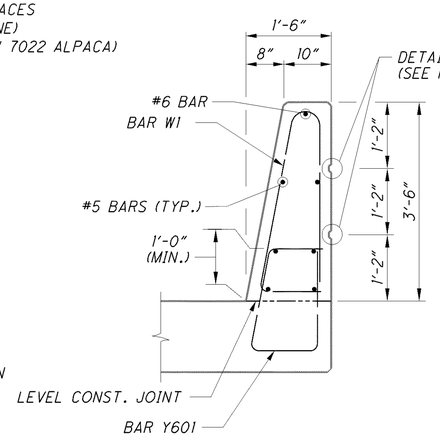

SECTION F-F

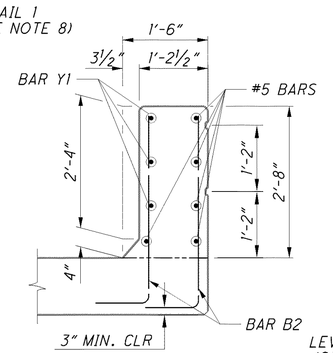

SECTION G-G

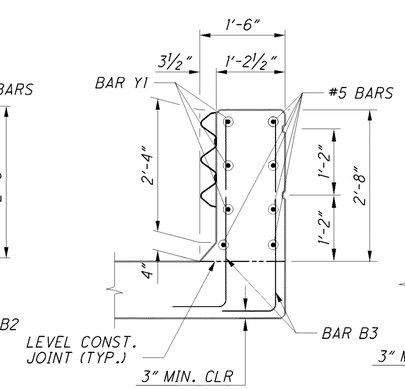

SECTION H-H

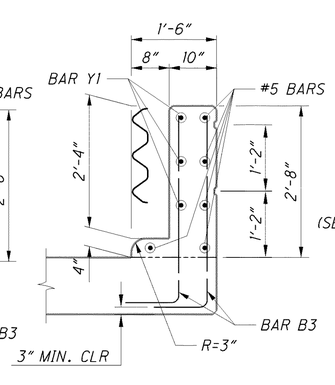

SECTION J-J

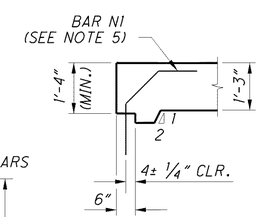

SECTION A-A

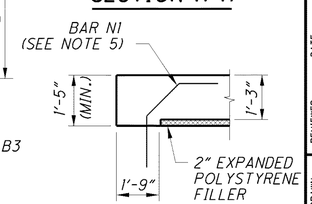

SECTION B-B

NO.	REVISIONS	DATE
	RECORD DRAWINGS	08-09-13

DESIGN AGENCY: WALSH HNTB (WALSH CONSTRUCTION)

CLEVELAND'S TUNNELBELT BRIDGES — OHIO DEPARTMENT OF TRANSPORTATION

BRIDGES 10 & 11

APPROACH SLAB DETAILS - 2

BRIDGE NO. CUY-77-1597 L AND CUY-90-1651 L
I-90WB AND I-77SB RAMP OVER E 14TH STREET

DESIGNED	DRAWN	REVIEWED	DATE
RSB	CEM	JOL	03-11-11
CHECKED	CHECKED	STRUCTURE FILE NUMBER	
NJ	NJ	1807919/1807900	

CUY-90-14.90
PID No. 77332/85531

38/38

38/38

090_1651LMD002.dgn 1/8/2016 11:35:30 AM rstriegel